EUROPEAN STANDARD

NORME EUROPÉENNE

EUROPÄISCHE NORM

EN 50176

October 2009

ICS 87.100

Supersedes EN 50176:1996

English version

Stationary electrostatic application equipment for ignitable liquid coating material - Safety requirements

Matériels stationnaires de projection électrostatique de produit liquide de revêtement inflammable - Exigences de sécurité

Stationäre Ausrüstung zum elektrostatischen Beschichten mit entzündbaren flüssigen Beschichtungsstoffen - Sicherheitsanforderungen

This European Standard was approved by CENELEC on 2009-09-01. CENELEC members are bound to comply with the CEN/CENELEC Internal Regulations which stipulate the conditions for giving this European Standard the status of a national standard without any alteration.

Up-to-date lists and bibliographical references concerning such national standards may be obtained on application to the Central Secretariat or to any CENELEC member.

This European Standard exists in three official versions (English, French, German). A version in any other language made by translation under the responsibility of a CENELEC member into its own language and notified to the Central Secretariat has the same status as the official versions.

CENELEC members are the national electrotechnical committees of Austria, Belgium, Bulgaria, Cyprus, the Czech Republic, Denmark, Estonia, Finland, France, Germany, Greece, Hungary, Iceland, Ireland, Italy, Latvia, Lithuania, Luxembourg, Malta, the Netherlands, Norway, Poland, Portugal, Romania, Slovakia, Slovenia, Spain, Sweden, Switzerland and the United Kingdom.

CENELEC

European Committee for Electrotechnical Standardization
Comité Européen de Normalisation Electrotechnique
Europäisches Komitee für Elektrotechnische Normung

Central Secretariat: Avenue Marnix 17, B - 1000 Brussels

© 2009 CENELEC - All rights of exploitation in any form and by any means reserved worldwide for CENELEC members.

Ref. No. EN 50176:2009 E

Foreword

This European Standard was prepared by SC 31-8, Electrostatic painting and finishing equipment, of Technical Committee CENELEC TC 31, Electrical apparatus for potentially explosive atmospheres.

The text of the draft was submitted to the formal vote and was approved by CENELEC as EN 50176 on 2009-09-01.

This European Standard supersedes EN 50176:1996.

The following dates were fixed:

– latest date by which the EN has to be implemented at national level by publication of an identical national standard or by endorsement	(dop)	2010-09-01
– latest date by which the national standards conflicting with the EN have to be withdrawn	(dow)	2012-09-01

This European Standard has been prepared under a mandate given to CENELEC by the European Commission and the European Free Trade Association and covers essential requirements of EC Directive 94/9/EC. See Annex ZZ.

CENELEC/TC 31 as the responsible committee has concluded that this new edition of EN 50176 does not contain substantial changes regarding the ESRs.

The State of the Art is included in Annex ZY "*Significant changes between this European Standard and EN 50176:1996*".

Contents

0 Introduction 4
0.1 Process 4
0.2 Explosion hazards 4
0.3 Electric hazards 4
1 Scope 5
2 Normative references 5
3 Definitions 6
4 General requirements 9
5 Requirements for the equipment 10
5.1 Electrostatic spraying systems 10
5.2 Requirements for spraying systems of category 3G 11
5.3 Special requirements for spraying systems of category 2G 12
5.4 Spraying area 13
5.5 High voltage supply 13
5.6 Electric requirements 14
5.7 Grounding measures 14
5.8 Supply for coating material 14
6 Testing 15
6.1 Tests of the high voltage cables 15
6.2 Test of the insulating spraying material supply hose 15
6.3 Tests of the stationary equipment 15
6.4 Specific test requirements for spraying systems of type B-L, type C-L or type D-L category 2G 17
7 Information for use 18
7.1 General 18
7.2 Instruction manual 18
7.3 Marking 19
7.4 Warning sign 21
Annex A (informative) Ignitability of water-based paints 22
Bibliography 24
Annex ZY (informative) Significant changes between this European Standard and EN 50176:1996 25
Annex ZZ (informative) Coverage of Essential Requirements of EC Directives 26

Figure

Figure 1 – Test assembly according to 6.4.2 17

Tables

Table 1 – Electrostatic spraying systems for ignitable and hard to ignite liquid coating materials – Fields of application 10
Table 2 – Requirements for electrostatic spraying systems of category 3G for ignitable and hard to ignite liquid coating materials 11
Table 3 – Survey of tests 15
Table 4 – Test intervals 19

0 Introduction

0.1 Process

During the electrostatic coating process the liquid coating material is transported to an electrostatic spraying device where it is converted to droplets by mechanical forces and by the influence of an electric field. During this atomising process the droplets are charged by high voltage of some 10 kV and a spray cloud is generated. The charged droplets are attracted by and applied to the earthed workpiece.

Droplets, which are not applied to the workpiece (overspray) are removed by a suction device or by other means.

After the coating process the coated workpieces are introduced into a dryer where the solvent is evaporated and a dry film of coating material is generated.

0.2 Explosion hazards

An explosion could occur, if

– the concentration of sprayed liquid ignitable coating materials in air is within the explosion limits,

– an ignition source of appropriate energy for this explosive atmosphere is present.

Ignition sources could be, for instance, a hot surface, an open flame, an electric arc or a spark.

An explosion could be prevented, if one – or better both – conditions are avoided. Because it is very difficult to exclude the possibility of ignitable discharges completely, the main focus should be the prevention of ignitable concentrations of explosive atmosphere.

0.2.1 Mixtures of ignitable coating materials and air could only explode within a given range of concentration, but not, if the concentration is above or below this range.

NOTE If an explosive mixture of coating materials and air is trapped in a closed room, an explosion could lead to a fatal increase of pressure.

0.2.2 Particular attention should be paid to the prevention of electrostatic charges on different surfaces, which are in the vicinity of the spray cloud. This could apply to workpieces during the coating process or the reciprocating devices and the mounting parts of the spraying system etc.

0.3 Electric hazards

0.3.1 Electric shock (by direct or indirect contact) could be generated, for instance, by contact with

– live parts, which are not insulated for operational reasons,

– conductive parts, which are not under dangerous voltage during normal operation, but in case of failure,

– insulated live parts whose insulation is insufficient or has been damaged due to mechanical influences.

0.3.2 Inadequate grounding could occur, for instance, due to

– faulty connections to the protective grounding system,

– a too high resistance to ground.

0.3.3 Hazards could occur, for instance, if hazardous malfunctions (e.g. shortcut of electronic safety circuits, of access guards to dangerous areas or of warning devices) occur due to interferences of the high voltage equipment and the components of control and safety systems.

0.3.4 Hazardous electrostatic discharges could be generated, for instance, by non-earthed conductive components or by large insulating surfaces, especially if they are backed with conductive material.

1 Scope

1.1 This European Standard specifies the requirements for stationary electrostatic application equipment for ignitable liquid coating materials and for hard to ignite liquid coating materials to be used in explosive atmospheres generated by their own spray cloud. A distinction is made between spraying systems corresponding to EN 50050 and spraying systems designed for higher discharge energies and/or currents.

This European Standard also specifies the design-related requirements for a safe operation of the stationary equipment including its electrical installation.

1.2 This European Standard considers four types of electrostatic spraying systems; see 5.1 for more details.

1.3 This European Standard deals with all hazards significant for the electrostatic spraying of coating materials, which could also contain small quantities of added metal particles, if the work is carried out under conditions recommended by the manufacturer. In particular, this includes ignition hazards resulting from the generated explosive atmosphere, and the protection of persons from electric shocks.

1.4 This stationary equipment is classified as equipment of group II, category 2G or category 3G for use in potentially explosive areas of zone 1 or 2, respectively.

NOTE For other safety aspects like

- zone classification of the areas in and around spray booths, see EN 12215:2004, 5.7.2.3;
- zone classification of other areas with explosive atmosphere, see EN 60079-10-1;
- selection, installation and application of other electrical and non electrical equipment in areas with explosion hazard, see EN 60079-14 and EN 12215:2004, 5.7.2.5;
- health protection (for instance, noise), see also EN 12215:2004, 5.5 and EN 14462;
- cleaning of spraying areas, see instruction manual of the spraying equipment;
- fire prevention and protection (for instance fire hazards due to other sources) see also EN 12215:2004, 5.7.1.

Design-related measures for reducing the generation of noise of the stationary equipment for electrostatic coating are given in EN ISO 11688-1. See also EN 14462.

2 Normative references

The following referenced documents are indispensable for the application of this document. For dated references, only the edition cited applies. For undated references, the latest edition of the referenced document (including any amendments) applies.

EN 1081, *Resilient floor coverings – Determination of the electrical resistance*

EN 1127-1, *Explosive atmospheres – Explosion prevention and protection – Part 1: Basic concepts and methodology*

EN 1149-5, *Protective clothing – Electrostatic properties – Part 5: Material performance and design requirements*

EN 12215:2004, *Coating plants – Spray booths for application of organic liquid coating materials – Safety requirements*

EN 13463-1, *Non-electrical equipment for use in potentially explosive atmospheres - Part 1: Basic method and requirements*

EN 13478, *Safety of machinery – Fire prevention and protection*

EN 50050, *Electrical apparatus for potentially explosive atmospheres – Electrostatic hand-held spraying equipment*

EN 60079-0, *Electrical apparatus for explosive gas atmospheres – Part 0: General requirements* (IEC 60079-0)

EN 60204-1, *Safety of machinery – Electrical equipment of machines – Part 1: General requirements* (IEC 60204-1)

EN 60529:1991, *Degrees of protection provided by enclosures (IP code)* (IEC 60529:1989)

EN 61340-4-1, *Electrostatics – Part 4-1: Standard test methods for specific applications – Electrical resistance of floor coverings and installed floors* (IEC 61340-4-1)

EN 62061, *Safety of machinery – Functional safety of safety-related electrical, electronic and programmable electronic control systems* (IEC 62061)

EN ISO 12100-1, *Safety of machinery – Basic concepts, general principles for design – Part 1: Basic terminology, methodology* (ISO 12100-1)

EN ISO 12100-2, *Safety of machinery – Basic concepts, general principles for design – Part 2: Technical principles* (ISO 12100-2)

EN ISO 13849-1, *Safety of machinery – Safety-related parts of control systems – General principles for design* (ISO 13849-1)

EN ISO 20344, *Personal protective equipment – Test method for footwear* (ISO 20344)

3 Definitions

For the purposes of this document, the following terms and definitions apply.

3.1
stationary electrostatic application equipment for ignitable liquid coating material
equipment in which the electrostatic spraying equipment is either fixed stationary (e.g. on supports) and is operated automatically or is guided by reciprocators (e.g. robots).

In general, the equipment comprises the following:

- spray booth;
- spraying area;
- spraying system;
- fixtures for workpieces;
- conveyors;
- grounding system;
- forced ventilation;
- fire prevention and protection equipment

3.2
spraying system
devices for application of liquid coating material by means of electrostatic charge.

In general, the spraying system consists of the following compounds:

- device for the supply of coating material;
- high voltage electrode;
- high voltage supply system;
- spraying device

3.3
high voltage supply system
system consisting in general of the following components:

- low voltage section with devices for switching on and off the unit and for adjustment, control, regulation, limitation and monitoring of current and voltage, as well as the required connecting cables;
- high voltage generator;
- high voltage switching device;
- high voltage cable;
- high voltage plug-and-socket connector

3.4
spraying area
area, closed or not, in which the coating material is applied to the workpiece by the electrostatic spraying system

3.5
dangerous discharge
discharge which generates the hazard of ignition of explosive mixtures or of electric shock

3.6
workpiece
article to which the coating material is applied

3.7
ignitable liquid coating materials
sprayed materials, especially varnishes, which could be ignited by an effective ignition source and which continue to burn after the ignition source has been removed or may react in the form of an explosion

NOTE A formula for the estimation of ignitability on the basis of the composition of the coating material is given in Annex B.

3.8
hard to ignite liquid coating materials
sprayed materials, especially varnishes, which could be ignited by an effective ignition source with an energy of 2 J or above and which continue to burn after the ignition source has been removed, or may react in the form of an explosion

NOTE A formula for the estimation of ignitability on the basis of the composition of the coating material is given in Annex B.

3.9
explosive atmosphere
mixture of air, under atmospheric conditions, and ignitable substances in the form of gas, vapour, mist, powder or flock, in such proportions that it can be ignited by effective ignition sources, such as excessive temperature, arcs or sparks [see EN 1127-1]

3.10
lower explosion limit (LEL)
concentration of ignitable gas, vapour, mist, powder or flock in air below which an explosive atmosphere will not be formed

3.11
average concentration of ignitable coating materials in air
mass of the ignitable coating material applied in the spraying area divided by the volume of air exchanged during the same period of time in the spraying area

3.12
discharge energy
energy discharged from a conductive part of the installation in form of a spark which could cause both electric shock to a person and an ignition of an explosive atmosphere

3.13
antistatic footwear
footwear that has a resistance to earth via its sole, which is low enough to prevent the build-up of electrostatic charges capable to produce an incendive discharge [see EN ISO 20344]

NOTE A necessary electric insulating resistance to prevent electric shocks is not contradictory to this definition.

3.14
antistatic clothes
clothes that have a resistance to earth, which is low enough to prevent the build-up of electrostatic charges capable to produce an incendive discharge [see EN 1149-5]

NOTE A necessary electric insulating resistance to prevent electric shocks is not contradictory to this definition.

3.15
antistatic floor
floor that has a resistance to earth, which is low enough to prevent the build-up of electrostatic charges capable to produce an incendive discharge

3.16
minimum air volume flow
air volume flow of the forced ventilation which shall be ensured in case of worst operational conditions as described in 5.4.1 and 5.4.4

3.17
accessories
accessories are all devices, components and other equipment, except for 3.2 of this standard

3.18
constant-voltage operation
closed control circuit system with direct feedback of the actual value of the output high voltage. During the constant-voltage operation the adjusted output high voltage is maintained constant up to the capacitance of the high voltage part via a control device, independent of the variable operational current

NOTE In general the symbol for this type of operation is U_k.

3.19
voltage-controlled operation
open control circuit system without feedback of the output high voltage. During the voltage-controlled operation the output high voltage is adjusted generally at a defined operational current. The output high voltage, however, is not maintained constant by a control device, it varies depending on the operational current and the on-load behaviour of the high voltage device

NOTE In general the symbol for this type of operation is U_v.

3.20
constant current operation
closed control circuit system with direct feedback of the actual value of the high voltage current to a control device. In doing so, the operational current is maintained constant, and the output high voltage varies load-dependently between a minimum and a maximum value defined by the process

NOTE In general the symbol for this type of operation is I_k.

3.21
operational current
current which flows within the high voltage circuit during failure-free operation

NOTE In general the symbol for the operational current is I_b.

3.22
overcurrent
current occurring during a malfunction, exceeding the operational current of the high voltage circuit and giving rise to expect that in voltage-controlled and constant voltage operation hazardous discharges or arcs between high voltage parts and earthed parts of the plant could occur in case the safety distance drops below the permissible limit

NOTE In general the symbol for overcurrent in the high voltage circuit is $I_ü$.

3.23
minimum voltage
voltage of the high voltage circuit giving rise to expect that in constant current operation hazardous discharges or arcs could occur between high voltage parts and earthed parts of the plant, in case the safety distance drops below the permissible limit

NOTE In general the symbol for minimum voltage in the high voltage circuit is U_{min}.

3.24
disconnection threshold
limit value for current $I_ü$ or voltage U_{min}. In case of any deviation of the actual value from the threshold value, disconnection of the high voltage supply is activated

3.25
locally acting fire extinguishing system
device which protects the highly hazardous area between spraying system and workpiece and is actuated immediately in case of fire. It shall meet the special requirements of electrostatic coating

3.26
skilled person
person who, due to technical training, experience and recent occupational activities, has sufficient knowledge in the field of electrostatic coating with stationary equipment, is familiar with the relevant and generally accepted technical rules, and thus is able to check and evaluate the occupationally safe state of coating plants

3.27
repeated inspection
inspection of the entire electrical equipment, systems and plants to be carried out at regular intervals

4 General requirements

4.1 All equipment and components shall be designed and constructed according to good engineering practice and comply with the required categories for group II devices to ensure avoidance of any ignition source.

4.2 All accessories shall be, if possible, outside the areas with explosion hazards.

4.3 All accessories used in areas with explosion hazards shall comply with the requirements of EN 60079-0 and/or EN 13463-1.

4.4 An appropriate grounding of the different surfaces shall be provided. Special care shall be taken that sufficient grounding is maintained by the hangers. These hangers shall be designed in such a way that deposits of coating materials are minimized.

4.5 Stationary equipment shall be designed and constructed to satisfy the intended function as given by the limitations of the manufacturer safely even in case of varying environmental conditions, influence of external voltages, exposure to humidity, vibrations, contaminations as well as other environmental influences. Stationary equipment shall be suitable for the intended mechanical and thermal demands and shall withstand the effects of present or predictable aggressive materials.

4.6 Spraying systems of category 2G, with exception of the spraying device, shall have at last IP-protection IP64 according to EN 60529 and spraying systems of category 3G, with exception of the spraying device, shall have at last IP-protection IP54 according to EN 60529.

4.7 Safety devices shall function independently of the measuring, control and regulation devices required for operation. The failure of a safety device shall be detected, if possible, by appropriate technical measures in an adequate period so that hazardous conditions are not likely to occur.

Fundamentally the fail-safe principle shall be applied.

In case of a failure of safety devices the stationary equipment shall be led to a safe condition as far as possible.

4.8 If the safety functions of the safety devices of the stationary equipment according to Clause 5 and Table 2 depend on software, particular attention shall be paid to the risks due to program errors.

This requirement is satisfied by observance of the requirements for the safety integrity level 2 according to EN 62061.

5 Requirements for the equipment

5.1 Electrostatic spraying systems

Depending on the maximal discharge energy that can occur, electrostatic spraying systems are categorised in four types according to Table 1.

Table 1 – Electrostatic spraying systems for ignitable and hard to ignite liquid coating materials – Fields of application

Types ("L" for liquid coating materials)	Discharge energy	Hazard by ignitable discharge during processing		Hazard by electric shock
		Ignitable coating material (see 3.7)	Hard to ignite coating material (see 3.8)	
Type A-L	< 0,24 mJ	No	No	No
Type B-L	< 350 mJ	Yes	No	No
Type C-L	< 2 J	Yes	No	Yes
Type D-L	> 2 J	Yes	Yes	Yes

NOTE 1 The discharge energy W can be calculated by the following formula: $W = ½ C \cdot U^2$. If resistors, semi-conductors or liquid conductors are present, the calculation of W results in too high values. Alternatively, the discharge energy can be determined by measurement.

NOTE 2 Hazards listed in the table are adequately prevented by observing this standard.

5.2 Requirements for spraying systems of category 3G

The requirements related to the different types are listed in Table 2.

Table 2 – Requirements for electrostatic spraying systems of category 3G for ignitable and hard to ignite liquid coating materials

Subclause	Requirements	Type A-L	Type B-L	Type C-L	Type D-L
5.2.1	Distance workpiece-spraying system	No	Yes [a]	Yes [a]	Yes
5.2.2	Disconnection of high voltage	No	Yes [a]	Yes	Yes
5.5.2	Protection against contact	No	No	Yes	Yes
5.2.3	Personal protection	No	No	Yes	Yes
5.2.4	Ignition protection/cleaning agent	Yes [b]	Yes	Yes	Yes
5.2.5	Locally acting fire extinguishing equipment [c]	No	Yes [a]	Yes [a]	Yes

[a] Not required if only hard to ignite liquid coating materials are processed (see 3.8).

[b] Satisfied by construction.

[c] A locally acting fire extinguishing equipment is not required when using category 2G equipment of types B-L, C-L and D-L only in areas with explosion hazards of zone 2.

5.2.1 Distance workpiece – spraying system

The distance between the workpieces and the parts of the spraying system under high voltage shall be so great that an electrical discharge is prevented during normal operation.

5.2.2 Safe disconnection of high voltage

A device shall be installed which prevents the occurrence of discharges between parts under high voltage and earthed parts in such a way that it disconnects the high voltage, discharges the spraying system and shuts down the supply of coating materials. In this context, a difference shall be made between voltage-controlled, constant voltage and constant current operating modes.

For category 3G devices, this requirement is considered to be satisfied if the safe disconnection is actuated after the first discharge at the latest. However, during normal operation spark discharges shall not occur.

5.2.2.1 Voltage-controlled and constant voltage operating mode

A device shall be installed, which is to disconnect the high voltage in case the safety distance between the parts under high voltage and earthed parts drops below the permissible limit.

For voltage-controlled and constant voltage operating mode this is achieved by disconnection in case of overcurrent $I_{ü}$.

The disconnection threshold shall be defined with consideration of the operational and local conditions.

NOTE 1 In general, an overcurrent $I_{ü}$, for operational currents of less than 200 µA up to 200 % or for operational currents of more than 200 µA up to 50 % is permissible.

NOTE 2 If the disconnection threshold $I_{ü}$ value is set too high, the safe disconnection of the high voltage in case the safety distance drops below the permissible limit and the breakthrough distance between parts under high voltage and earthed parts of the plant is not ensured any more. This should be of special consideration in case of series connexion of high impedance resistance within the high voltage circuit.

5.2.2.2 Constant current operating mode

A device shall be installed, which is to disconnect the high voltage in case the safety distance between the parts under high voltage and earthed parts drops below the permissible limit.

For constant current operating mode this is achieved by a disconnection if a defined minimum output value of high voltage U_{min} is undercut.

The disconnection threshold shall be defined with consideration of the operational and local conditions.

NOTE 1 In general a value of the minimum voltage U_{min} of 20 % to 50 % below the value of the output high voltage for the failure-free normal operation is permitted.

NOTE 2 If the disconnection threshold U_{min} value is set too low, the safe disconnection of the high voltage in case the safety distance drops below the permissible limit and the breakthrough distance between parts under high voltage and earthed parts of the plant is not ensured any more.

5.2.3 Protection against too high discharge energy

After disconnection of the high voltage all live parts shall be discharged to a discharge energy of less than 350 mJ before these parts can be reached. The discharge time shall be defined considering the operational and local conditions.

5.2.4 Protection against ignition of ignitable cleaning agents

If ignitable liquids are used for cleaning purposes, all live parts shall be discharged to a discharge energy of less than 0,24 mJ after the disconnection of high voltage, before these parts can be reached.

NOTE Charged areas of insulating plastics may also be able to ignite ignitable cleaning agents if their surface area is exceeding a certain value [see CLC/TR 50404].

5.2.5 Locally acting automatic fire extinguishing system

Electrostatic spraying systems shall be equipped with locally acting automatic fire extinguishing systems which are actuated immediately in case of fire. When the fire extinguishing system has been activated, the high voltage supply, the supply of coating materials and the pressurised air shall be cut-off automatically.

EN 13478 shall be observed.

It shall be checked in each individual case, whether a present room-protection system is also able to fulfil the function of a locally acting automatic fire extinguishing system.

NOTE In addition to the room-protection system, locally acting fire extinguishing systems (fire extinguishing systems which are installed and allocated to the object) shall protect the area between the outlet of the paint and the workpiece effectively.

5.3 Special requirements for spraying systems of category 2G

In addition to the requirements in 5.2, spraying systems of category 2G shall satisfy the following requirements.

5.3.1 Prevention of hazardous discharges

A device shall be installed, which is to prevent a hazardous discharge between parts under high voltage and earthed parts in such a way that it disconnects the high voltage, discharges the spraying system and shuts down the supply of coating materials. In this connection, a difference shall be made between voltage-controlled, constant voltage and constant current operating mode. This could be achieved by one of the following measures:

– automatic monitoring of the permitted distance between spraying system and workpiece;

– safe disconnection of the high voltage before the first ignitable discharge occurs, at the maximum permissible motional speed.

5.3.2 Testing of spraying systems

Spraying systems of type A-L shall satisfy the requirements of EN 50050. Spraying systems of types B-L, C-L and D-L shall pass the temperature test, the shock test and the cable pull test of EN 50050. After the shock test, the discharge energy shall not increase and IP64 is still fulfilled.

Concerning further tests, see 6.3 and Table 4 in 7.2.3.

5.4 Spraying area

5.4.1 Spray booths shall be in accordance with the requirements of EN 12215:2004.

5.4.2 If the lower explosion limit (LEL) is unknown or in question, an average concentration of ignitable coating material in air of 20 g/m³ shall not be exceeded.

5.4.3 Inside spray booths and in a radius of 2,5 m around the openings of the booths an antistatic floor shall be installed. The resistance shall not exceed $10^8\,\Omega$. Its resistance shall comply with the test conditions of EN 61340-4-1. When using elastic floor the requirements of EN 1081 shall be observed.

5.4.4 In addition to the requirements of EN 12215:2004, 5.6.2.3, the forced ventilation shall be interlocked with the high voltage supply in such way to prevent actuation of the high voltage when the forced ventilation is not working effectively.

5.4.5 When using walls, enclosures, signs and labels made of non-conductive material the occurrence of propagating brush discharges shall be prevented. Thin sheets of plastic material less than 9 mm thick in contact with large areas of earthed metal (or other conductors) can give rise to propagating brush discharges. Where such thin sheets are used, the breakdown voltage through the sheet shall not exceed 4 kV to avoid the occurrence of propagating brush discharges.

NOTE The use of thin layers of non-conductive material on conductive surfaces may cause hazards due to the formation of propagating brush discharges

5.5 High voltage supply

5.5.1 The high voltage supply shall be safeguarded against unauthorised switching on. Switching off shall be possible at any time.

NOTE Suitable safeguards against unauthorised switching on are e.g. key locks, hardware and software authorisation.

5.5.2 On all doors and openings of the spraying area where the hazard of contact with parts under high voltage exists the presence of the high voltage shall be indicated by an optical or acoustic signal. Every access to the spraying area provided for operators shall be safeguarded in such a way that the high voltage is disconnected when entrance is gained. The interlock shall satisfy the performance level d of EN ISO 13849-1. Other openings of the spraying area through which parts under high voltage could be contacted shall be locked in such a way to be only opened by keys or tools. When using systems of types C-L and D-L an interlock of the high voltage with all doors and openings shall be installed to prevent an electric shock of persons.

5.5.3 If exposed parts of the high voltage supply system are located outside the spraying area or outside a closed electrical operating area, then complete protection against direct contact shall be provided. In addition appropriate measures (e.g. closed earthed housing) shall be taken to avoid persons or objects being charged by the influence of a present electrical field.

5.5.4 Components within the spraying area which are not at high voltage potential for operational reasons, shall be connected with the ground contact of the high-voltage supply system with a separate conductor of low impedance.

5.5.5 High voltage cables shall comply with the tests of 6.1.

5.5.6 Parts of the spraying system under high voltage located outside the spraying area shall be installed in such a way to prevent occurrence of discharges hazardous for persons.

5.5.7 The minimum distance in air between the parts under high voltage and the earthed parts shall not be less than 0,25 cm/kV. These minimum distances are not applicable both for the distance between the electrostatic spraying device and the workpiece, and the design-specific distances of the spraying devices.

NOTE Possible occurrence of surface discharges at the spraying device could have an influence on the minimum distances.

5.6 Electric requirements

The electric equipment not related to the high voltage system shall comply with EN 60204-1.

5.7 Grounding measures

5.7.1 All conductive components of the equipment, like floor, walls, ceilings, fences, conveyors, workpieces, containers for coating material, reciprocators or elements of construction etc. within the spraying area, except for parts under high voltage for operational reasons, shall be connected to the grounding system. Parts of the booth shall be earthed in compliance with EN 12215:2004.

5.7.2 If an appropriate grounding of the conductive parts according to 5.7.1 cannot be achieved, the possible discharge energy shall not exceed 0,24 mJ.

5.7.3 The resistance to earth from the suspending point of each workpiece shall not exceed 1 MΩ. The voltage during measurement shall be 500 V or 1 000 V. The construction of hangers shall ensure that the workpieces remain earthed during the coating process.

NOTE Since workpieces are often earthed by metallic hooks, it is important to clean these hooks regularly or to design them in such a way, that the built-up of insulating layers of coating materials is prevented.

5.7.4 If an appropriate grounding of the workpiece according to 5.7.1 cannot be ensured, the dissipation of electrical charges at the workpiece by other devices, e.g. ionisers, is permitted. Such devices shall not exceed the permitted discharge energy of the spraying systems, for which they are used. Moreover, these devices shall be submitted to the same test for admissible discharge energy as the spraying systems they are used with. The dissipation device shall be interlocked with the spraying system in such a way to disconnect the high voltage and to stop coating in case of failure of this dissipation device.

5.8 Supply for coating material

5.8.1 Where conductive parts are used for the coating material supply system, these parts shall be either bonded to earth or connected with the high voltage supply system so that their potential level is invariably identical with that of the electrostatic spraying system.

5.8.2 Where a coating material container made of conductive material is connected to the high voltage supply system in normal operation, it shall be located in an electrical operating enclosure which is interlocked with the high voltage supply system and is earthed in accordance with the requirements as laid down in 5.2.3.

5.8.3 Where a coating material container made of non-conductive material is used, the coating material shall be in contact with a metallically conductive part so that the electrical charge of the coating material is diverted across this part in accordance with 5.2.3.

5.8.4 Where the requirements as laid down in 5.8.2 and 5.8.3 are not fulfilled, precautionary measures shall be taken in order to prevent any contact with the coating material container or any other exposed parts of the coating material supply under high voltage in normal operation.

5.8.5 Coating material supply hoses made of non-conductive material which are used for the supply of coating material under high voltage in normal operation, shall be laid in accordance with the requirements of 5.5.6 and 5.5.7 and withstand the high voltage test as specified in 6.2.

5.8.6 The requirements of 5.8.5 are also applicable for coating material containers made of non-conductive material; the high voltage test as specified in 6.2 shall be carried out.

6 Testing

6.1 Tests of the high voltage cables

6.1.1 A sample of the high voltage cable of at least 2,5 m is raised to a voltage of 1,2 U_{max} for a period of 24 h, the electrically conductive screen of the cable being earthed, except for 75 cm at each end. There shall be no breakdown.

6.1.2 If the cable does not have an electrically conductive screen, a sample cable, at least 2,5 m in length, is placed on an earthed metal plate. A test voltage of 1,2 U_{max} is applied for 24 h. There shall be no breakdown.

6.2 Test of the insulating spraying material supply hose

6.2.1 A sample of the insulating hose of at least 2,5 m filled with ordinary tap water at ambient temperature is placed on an earthed metal plate. The tap water inside the hose is raised to a voltage of 1,2 U_{max} for a period of 24 h. There shall be no breakdown.

6.2.2 If there is an electrically conductive screen, the sample hose of at least 2,5 m is filled with ordinary tap water at ambient temperature and raised to a voltage of 1,2 U_{max} for a period of 24 h. The electrically conductive screen of the hose will be earthed, except for 75 cm at each end. There shall be no breakdown

6.3 Tests of the stationary equipment

The tests shall be carried out for each single spraying system. The tests shall be carried out by skilled persons and include the tests according to Table 3. For test intervals for repeated tests, see Table 4.

Table 3 – Survey of tests

	Kind of test	Requirements
6.3.1	The stationary equipment for electrostatic coating with ignitable liquid coating materials shall be tested for occupationally safe state	In this context, especially the disconnection threshold, the overcurrent $I_ü$ and the minimum voltage U_{min} shall be defined and documented with respect to operational and local conditions (see also 5.2.2).
6.3.2	Effectivity of forced ventilation (exhaust air systems)	See 5.4.4
6.3.3	Safe disconnection of high voltage shall be tested for voltage-controlled and constant voltage operation	See 5.2.2 and 5.2.2.1 The disconnection threshold $I_ü$ shall be defined and documented with respect to operational and local conditions. It shall be tested if the high voltage is disconnected in case of inadmissible increase of the operational current I_b and if the disconnection threshold $I_ü$ is reached. In this context, the disconnection threshold $I_ü$ defined during the initial test shall be checked. A disconnection threshold $I_ü$, giving rise to expect an occurrence of hazardous discharges or flashover between parts under high voltage and earthed parts of the plant in case the safety distance drops below the permissible limit, is not permitted.
6.3.3.1	Category 3G devices	See 5.2.2 and 5.2.2.1
6.3.3.2	Category 2G devices	See 5.2.2, 5.2.2.1 and 6.4

Table 3 – Survey of tests *(continued)*

	Kind of test	Requirements
6.3.4	Safe disconnection of high voltage supply shall be tested for constant current operation	See 5.2.2 and 5.2.2.2 The disconnection threshold U_{min} shall be defined and documented with respect to operational and local conditions. It shall be tested if the high voltage is disconnected in case of inadmissible decrease of the high voltage below the disconnection threshold U_{min}. In this context, the disconnection threshold U_{min} defined during initial test shall be checked. A disconnection threshold U_{min}, giving rise to expect an occurrence of hazardous discharges or flashover between parts under high voltage and earthed parts of the plant in case the safety distance drops below the permissible limit, is not permitted.
6.3.4.1	Category 3G devices	See 5.2.2 and 5.2.2.2
6.3.4.2	Category 2G devices	See 5.2.2, 5.2.2.2 and 6.4
6.3.5	Protection against too high discharge energy	See 5.2.3, 5.8.2 and 5.8.3
6.3.6	Protection against ignition of cleaning agents	See 5.2.4
6.3.7	Effectivity of measures for protection against direct contact	See 5.5.2, 5.5.6 and 5.8.5
6.3.8	Effectivity of grounding measures	See 5.7
6.3.9	Interlocks / protection against entrance	See 5.5.2
6.3.10	Effectivity of locally acting fire extinguishing system	See 5.2.5 In addition to a room-protection system, locally acting fire extinguishing systems (installed fixedly and allocated to the object) shall give effective protection for the hazard zone between the outlet of coating materials and the workpiece. It shall be proved for each individual case, if the aspects of locally acting fire extinguishing systems and the room-protection system could be satisfied by one fire extinguishing system.
6.3.11	Conductive parts of the spraying material supply system	See 5.8.1
6.3.12	Minimum clearance in air	See 5.5.7 and 5.8.5
6.3.13	Further tests	In compliance with EN 12215:2004

6.4 Specific test requirements for spraying systems of type B-L, type C-L or type D-L category 2G

The test according to this subclause is made for proving that the requirements for equipment of category 2G are observed.

6.4.1 The test shall be carried out under operational environmental conditions. During the test no explosive atmosphere shall be present. The environmental conditions (temperature, relative humidity and air pressure) shall be recorded in the test protocol.

A test of the total stationary equipment at the location is required.

6.4.2 The test shall be carried out with a device shown in Figure 1. The motion of the electrodes in relation to each other shall be linear to the centre-lines and shall not be influenced directly or indirectly by other objects.

NOTE For the test it is of no importance which electrode is moved.

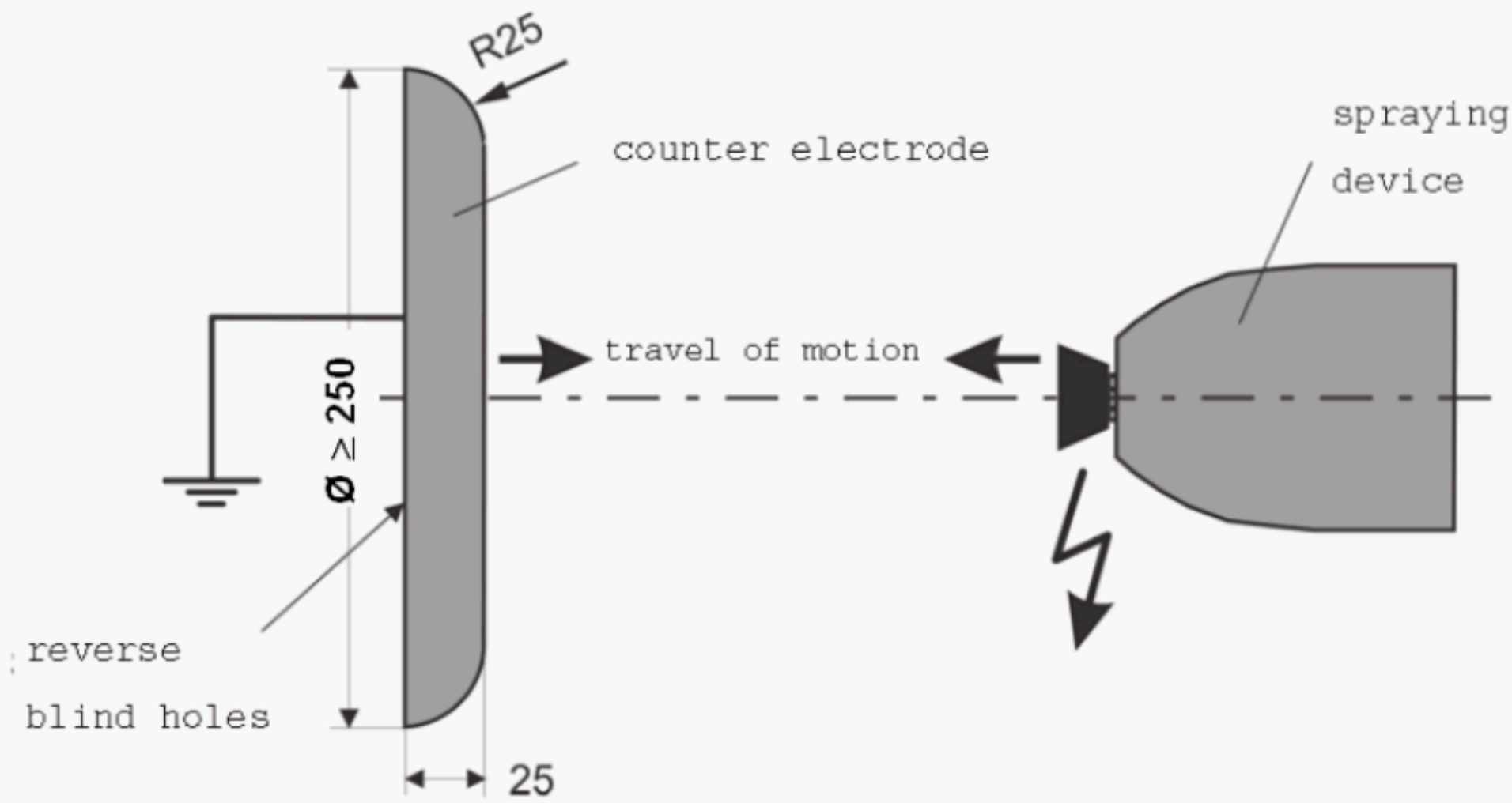

NOTE All dimensions in millimetres.

Figure 1 – Test assembly according to 6.4.2

6.4.3 In the start position, the distance between the electrodes shall be at least 0,5 cm/kV. The output voltage shall be the maximum admissible operational voltage.

6.4.4 During the test, the approach speed between the electrode under high voltage and the earthed electrode shall correspond to 1,2 times the maximum admissible speed of motion of the spraying device during spraying process determined by the manufacturer, but at least 500 mm/s.

6.4.5 Both electrodes shall be approximated up to about 1 cm.

6.4.6 The diameter of the counter electrode shall be 100 mm greater than the imaginary circle running through the electrode tips (in case of external charging), at least 250 mm.

6.4.7 The test shall be carried out five times for each spraying system. In all cases, a safe disconnection shall take place before the first discharge. A discharge between the electrodes shall not occur after disconnection.

NOTE In the sense of this test requirement a discharge is a visible and audible spark between the electrodes.

7 Information for use

7.1 General

The information for use with all information relevant for safety of normal operation and maintenance shall be written in the language of the user. Furthermore, it shall be accompanied by a version in the language of the manufacturer.

7.2 Instruction manual

7.2.1 General

Every stationary equipment for electrostatic spraying of ignitable liquid coating materials shall be accompanied by an instruction manual according to EN ISO 12100 series. It shall also contain the content of Tables 3 and 4.

NOTE The instruction manual could be written in a general comprehensive, illustrated or symbolic language.

The instruction manual shall contain the admissible combinations of devices, including the indication of the admissible accessories.

The type plate shall include the reference "admissible combinations of devices, see information for use.

The instruction manual shall contain the reference that when using protective gloves, these gloves shall comply to the requirements of 7.2.4.

7.2.2 Cleaning, maintenance and corrective maintenance

The manufacturer shall provide comprehensive information on cleaning and maintenance. The stationary electrostatic spraying device shall be maintained regularly according to the instructions of the manufacturer. The instruction manual shall contain the following warning notices:

7.2.2.1 Before cleaning or any other manual work within the spraying area the high voltage supply system shall be disconnected and secured against restart.

7.2.2.2 Use only electrically conductive container for cleaning liquids; the containers shall be earthed.

7.2.2.3 Non-ignitable cleaning agents shall be preferred.

7.2.2.4 Ignitable cleaning liquids shall only be used if, after disconnection of the high voltage supply, all parts under high voltage are discharged to a discharge energy of less than 0,24 mJ before these parts are possible to be reached, see 5.2.4.

NOTE Most of the ignitable solvents have an ignition energy of about 0,24 mJ corresponding to 60 nC.

7.2.2.5 Appropriate measures shall ensure that the resistance to earth of the suspending point of the workpiece shall not exceed 1 MΩ, measured at 500 V or 1 000 V.

7.2.3 Test intervals

For a safe operation of the stationary equipment for electrostatic spraying of ignitable liquid coating materials the intervals for repeated test shall be determined by the manufacturer. The intervals depend on the operational and local conditions. The following maximum test intervals are recommended.

NOTE An automatic monitoring of the stationary equipment for electrostatic spraying of ignitable liquid coating materials is considered to be equivalent.

Table 4 – Test intervals

Subclause	Reference	Test interval category 2	Test interval category 3
6.3.1	Occupationally safe state of the whole equipment	12 months	12 months
6.3.2	Effectivity of forced ventilation	continuously	continuously
6.3.3	Overcurrent disconnection	at every switch-on	weekly
6.3.4	Low voltage disconnection	at every switch-on	weekly
6.3.5	Discharge energy	weekly	weekly
6.3.6	Ignition protection for ignitable cleaning agents	before each cleaning	weekly
6.3.7	Protection against contact	weekly	weekly
6.3.8	Grounding measures	weekly	weekly
6.3.9	Protection against entrance	weekly	weekly
6.3.10	Fire extinguishing plant	6 months	6 months
6.3.11	Conductive parts of the spraying material supply system	weekly	weekly
6.3.12	Minimum clearance in air	weekly	weekly
6.3.13	Further tests	in compliance with EN 12215:2004	in compliance with EN 12215:2004

7.2.4 Additional information

The instruction manual shall contain at least the following additional information:

– description of the operational limitations of equipment marked with "X";
– all references necessary for proper operation of the equipment;
– function of the safety devices;
– reference: "This equipment could present hazards if it is not operated according to the information given in the instruction manual";
– footwear to be used by the operator shall comply with EN ISO 20344, the measured insulation resistance shall not exceed 100 MΩ;
– protective clothing, including gloves, should comply with EN 1149-5, the measured insulation resistance shall not exceed 100 MΩ;
– the capacitance of the high-voltage generator.

NOTE The capacitance of the whole system shall be measured after installation.

7.3 Marking

The following marking and any additional information required for safe operation of stationary equipment for electrostatic coating with ignitable liquid coating materials shall be placed clearly and visible on the equipment. This marking shall be legible and durable taking into account possible chemical decomposition or corrosion.

NOTE This marking is to be supplemented by the requirements of Directive 94/9/EC, if necessary.

7.3.1 High voltage supply

The high voltage supply shall be marked as follows:

- name of the manufacturer or his registered trade mark;
- the manufacturer's type identification which shall be unique in order to ensure the safe use of combinations of the apparatus;
- range of input voltages and whether AC or DC;
- frequency range of input;
- input power;
- the number of this European Standard EN 50176;
- rated output voltage;
- rated output current;
- any marking generally required by the standards of construction of the electrical equipment.

7.3.2 Spraying systems for liquid coating materials

7.3.2.1 The marking of spraying systems of type A-L according to Table 1 shall comply with of EN 50050.

7.3.2.2 The marking of spraying systems of type B-L, C-L or D-L according to Table 1 shall be as follows:

- name of the manufacturer or his registered trade mark;
- type of system;
- discharge energy.

7.3.3 Additional marking of the electrical equipment

7.3.3.1 Category 2

- The symbol Ex to indicate that the electrical equipment is designed and tested for use in potentially explosive areas or is specifically allocated to such an equipment;
- the name or the sign of the notified body, as well as the reference to the test certificate. These indications shall be preferably given in the following form: Year of issue, the word ATEX followed by the consecutive number of the year;
- the markings
  - II for the device group, followed by
  - 2 for the category of the electrical equipment, followed by
  - G for "gas explosion protection", followed by
  - the maximum surface temperature T as temperature value in °C,
  - X for determining specific operational conditions, for instance: “Only for hard to ignite liquid coating materials”.

7.3.3.2 Category 3

- The symbol Ex to indicate that the electrical equipment is designed and tested for use in potentially explosive areas or is specifically allocated to such an equipment;
- a reference number referring to the technical documentation used by the manufacturer;
- the markings
  - II for the device group, followed by
  - 3 for the category of the electrical equipment, followed by
  - G for "gas explosion protection", followed by
  - the maximum surface temperature T as temperature value in °C,
  - X for determining specific operational conditions, for instance: “Only for hard to ignite liquid coating materials”.

7.3.3.3 Examples for markings

Name of the manufacturer, registered trademark	**"admissible combinations of devices, see information for use"**		
type	production number	123456	2008
Ex	serial number	123456	
II 2 G	**N.A. XX/ATEX/9999**	**EN 50176**	
discharge energy [mJ]	**IP64**		
input voltage [V]	max. surface temperature "T" [°C]	output voltage [kV]	
input power [W]	input frequency [Hz]	output current [µA]	
N.A. = Name or sign of the responsible notified body.			

Name of the manufacturer, registered trademark	**"admissible combinations of devices, see information for use"**		
type	production number	123456	2008
Ex	serial number	123456	
II 3 G X	**ATEX**	**EN 50176**	
discharge energy [mJ]	**IP54**		
input voltage [V]	max. surface temperature "T" [°C]	output voltage [kV]	
input power [W]	input frequency [Hz]	output current [µA]	

7.4 Warning sign

The stationary equipment for electrostatic coating with ignitable liquid coating materials shall only be used by trained staff familiar with the requirements for safe operation (e.g. safe entering of the booth) of this European Standard. In addition, a warning sign in a language understood by the operator shall be delivered by the manufacturer and shall be placed at a noticeable place in the vicinity of the spraying area. This warning sign shall contain the working procedures and protective measures to be observed by the operators. Hazards generated by inappropriate cleaning shall be pointed out in a clear way (see 7.2.2).

Annex A
(informative)

Ignitability of water-based paints

Summary of the publication of U. v. Pidoll and H. Krämer, PTB Braunschweig (see Bibliography):

At present the majority of the stationary electrostatic paint spraying equipment is adapted to water-based paints (so-called water paints). In this context, considerable facilitation of the fire and explosion protection may be benefited from, if the water paints used have proved to be non-ignitable. To clarify this question, the combustion behaviour of more than 200 electrostatically sprayed water paints, which are suspensions of ignitable or non-ignitable pigments and ignitable binders in mixtures of water-soluble ignitable solvents and water, was investigated. The investigations also included rinsing and cleaning liquids. The spraying of the paints was done with high rotation bell-shaped atomizers. While the large majority of the commercial water paints was found to be non-ignitable in the atomized state, ignitability could be verified for some of those paints. It makes sense to classify the investigated paints into three groups:

A.1 Non-ignitable

Paints in this group have the following composition:

% by weight H_20 > 63/37 % by weight LM + 49/51% by weight ORG

where

H_20: water

LM: liquid organic phase, mainly consisting of higher glycol esters in mixture with max. 1:1 propanol

ORG: solid organic phase, mainly consisting of binder and pigments

Paints of this type act like water in the liquid phase and in the atomized state. If also the rinsing and thinner liquids correspond to this category, e. g. contain no more than 35 % by weight of 1:1 butylglykol/n-propanol, rest water, no explosion protection is necessary. The requirements of EN 50348 (mainly protection against contact) shall be taken into account.

Paints of this group are classified as being non-ignitable liquid coating material.

A.2 Hard to ignite

Paints in this group have the following composition:

% by weight H_20 > 60/40 % by weight LM + 33/67 % by weight ORG

Spray clouds of these paints cannot be ignited by sparks having an energy < 4 J. Usually, explosion protection in the spraying area is not necessary, provided no ignition sources with energies of more than 2 J are present.

Paints of this group are classified as being liquid coating material with low ignitability.

A.3 Ignitable

Paints which do not satisfy the criteria of non-ignitable or of low ignitability.

Paints of this group are classified as being ignitable liquid coating material.

For electrostatic spraying systems of the types A-L, B-L, C-L to process with all paints, which are classified as non-ignitable or hard to ignite, a local fire prevention and protection device for the electrostatic spraying devices is not necessary. This does, however, not mean, that fire prevention and protection can be neglected as a whole. Even for paints classified in such a way it has to be expected that they will be flammable again as varnish layer following partial drying. Furthermore, it has to be taken into account that, due to strong fire exposure, water paints may as well burn in the case of a fire started for other reasons and may thus present a certain fire load.

Bibliography

Directive 94/9/EC of the European Parliament and the Council of 23 March 1994 on the approximation of the laws of the Member States concerning equipment and protective systems intended for use in potentially explosive atmospheres, OJ L 100, 19.4.1994, p. 1–29

EN 14462, *Surface treatment equipment – Noise test code for surface treatment equipment including its ancillary handling equipment – Accuracy grades 2 and 3*

EN 50348, *Automatic electrostatic spraying equipment for non-flammable liquid spraying material*

CLC/TR 50404:2003, *Electrostatics – Code of practice for the avoidance of hazards due to static electricity*

EN 60079-10-1, *Explosive atmospheres – Part 10-1: Classification of areas – Explosive gas atmospheres* (IEC 60079-10-1)

EN 60079-14, *Explosive atmospheres – Part 14: Electrical installations design, selection and erection* (IEC 60079-14)

EN 60079-17, *Explosive atmospheres – Part 17: Electrical installations inspection and maintenance* (IEC 60079-17)

EN ISO 11688-1, *Acoustics – Recommended practice for the design of low-noise machinery and equipment – Part 1: Planning* (ISO/TR 11688-1)

U. v. Pidoll and H. Krämer, *Flammability Characteristics of Sprays of Water-based Paints*, Fire and Safety Journal 29 (1997), P. 27-39

U. v. Pidoll, *Ignitability of spray clouds of organic solvents, solvent/water mixtures and water-based paints by electric sparks and open flames*, Proceedings of the ESA/IEEE-IAS-EPC/IEJSFE Joint Conference on Electrostatics 2006 in Berkeley, vol. 2, P. 425-433

Annex ZY
(informative)

Significant changes between this European Standard and EN 50176:1996

The significant changes with respect to EN 50176:1996 are as listed below.

	Type		
	Minor and editorial changes	Extension	Substantial change regarding ESR´s [a]
Modification of the title of the standard	X		
Separation of the hazards into “explosion hazard” and “electric hazards”		X	
Reference to EN 12215 for requirements concerning spray booths for liquid coating material		X	
Adaptation of the safety requirements to the EU Directive 94/9/EC (ATEX)		X	
Application of the safety integrity level 2 according to EN 62061		X	
Determination of the requirements for spraying systems of category 3G		X	
Determination of requirements of “voltage-controlled and constant voltage operating mode” and “constant current operating mode”		X	
Determination of special requirements for spraying systems of category 2G		X	
Determination of requirements concerning spraying areas		X	
Adaptation of tests concerning the categories of spraying systems		X	
Determination of specific test requirement with moving electrode, 6.3		X	
Revision of the “Information for use”, Clause 7	X		
Revision of marking for stationary electrostatic application equipment		X	
[a] ESR = Essential Health and Safety Requirements (Annex II of Directive 94/9/EC).			

General conclusion on the change of the State of the Art by this standard

CENELEC/TC 31 as the responsible committee has concluded that this new edition of EN 50176 does not contain substantial changes regarding the ESRs.

Annex ZZ
(informative)

Coverage of Essential Requirements of EC Directives

This European Standard has been prepared under a mandate given to CENELEC by the European Commission and the European Free Trade Association and within its scope the standard covers only the following essential requirements out of those given in Annex II of the EC Directive 94/9/EC:

- ER 1.0
- ER 1.0.1 (satisfied with type A-L, not satisfied with types B-L, C-L & D-L)
- ER 1.0.2, ER 1.0.3, ER 1.0.4, ER 1.0.5, ER 1.0.6
- ER 1.1, ER 1.1.1
- ER 1.2, ER 1.2.1, ER 1.2.2, ER 1.2.3, ER 1.2.4, ER 1.2.6
- ER 1.2.7 a), ER 1.2.7 c), ER 1.2.7 d)
- ER 1.2.8
- ER 1.3, ER 1.3.1, ER 1.3.2, ER 1.3.3
- ER 1.4.1
- ER 1.5.1, ER 1.5.2, ER 1.5.5, ER 1.5.6, ER 1.5.7, ER 1.5.8
- ER 1.6.1, ER 1.6.2, ER 1.6.3, ER 1.6.4, ER 1.6.5
- ER 2.2.1, ER 2.2.1.1, ER 2.2.1.3
- ER 2.3.1, ER 2.3.1.1

Compliance with this standard provides one means of conformity with the specified essential requirements of the Directive concerned.

WARNING: Other requirements and other EC Directives may be applicable to the products falling within the scope of this standard.