EUROPEAN STANDARD

NORME EUROPÉENNE

EUROPÄISCHE NORM

EN 15853

June 2010

ICS 13.040.20

English Version

Ambient air quality - Standard method for the determination of mercury deposition

Qualité de l'air ambiant - Méthode normalisée pour la détermination des dépôts de mercure

Außenluftbeschaffenheit - Standardisiertes Verfahren zur Bestimmung der Quecksilberdeposition

This European Standard was approved by CEN on 5 May 2010.

CEN members are bound to comply with the CEN/CENELEC Internal Regulations which stipulate the conditions for giving this European Standard the status of a national standard without any alteration. Up-to-date lists and bibliographical references concerning such national standards may be obtained on application to the CEN Management Centre or to any CEN member.

This European Standard exists in three official versions (English, French, German). A version in any other language made by translation under the responsibility of a CEN member into its own language and notified to the CEN Management Centre has the same status as the official versions.

CEN members are the national standards bodies of Austria, Belgium, Bulgaria, Croatia, Cyprus, Czech Republic, Denmark, Estonia, Finland, France, Germany, Greece, Hungary, Iceland, Ireland, Italy, Latvia, Lithuania, Luxembourg, Malta, Netherlands, Norway, Poland, Portugal, Romania, Slovakia, Slovenia, Spain, Sweden, Switzerland and United Kingdom.

EUROPEAN COMMITTEE FOR STANDARDIZATION
COMITÉ EUROPÉEN DE NORMALISATION
EUROPÄISCHES KOMITEE FÜR NORMUNG

Management Centre: Avenue Marnix 17, B-1000 Brussels

© 2010 CEN All rights of exploitation in any form and by any means reserved worldwide for CEN national Members.

Ref. No. EN 15853:2010: E

Contents

Page

Foreword 3
1 Scope 4
2 Normative references 4
3 Terms, definitions and abbreviations 4
4 Principle of mercury deposition determinations 7
5 Siting requirements for mercury deposition determinations 7
6 Reagents 8
7 Sampling 9
8 Analysis 11
9 Quality control 11
10 Calculation of results 12
11 Estimation of the measurement uncertainty of the method 14
12 Performance characteristics determined in field tests 15
13 Reporting of results 16
Annex A (informative) Sampling equipment that can be used for precipitation sampling 17
Annex B (informative) Sampling procedure 20
Annex C (informative) Analytical procedure 22
Annex D (informative) Summary of field trial validation tests 27
Annex E (informative) Relationship between this European Standard and the Essential Requirements of EU Directives 32
Bibliography 33

Foreword

This document (EN 15853:2010) has been prepared by Technical Committee CEN/TC 264 “Air quality”, the secretariat of which is held by DIN.

This European Standard shall be given the status of a national standard, either by publication of an identical text or by endorsement, at the latest by December 2010, and conflicting national standards shall be withdrawn at the latest by December 2010.

Attention is drawn to the possibility that some of the elements of this document may be the subject of patent rights. CEN [and/or CENELEC] shall not be held responsible for identifying any or all such patent rights.

This document has been prepared under a mandate given to CEN by the European Commission and the European Free Trade Association, and supports essential requirements of EU Directive(s).

There are currently only European Standard methods for the determination of the mercury concentration in water samples (EN ISO 17852, *Water quality — Determination of mercury — Method using atomic fluorescence spectrometry (ISO 17852:2006)* and EN 1483, *Water quality — Determination of mercury — Method using atomic absorption spectrometry*) but no standard method exists for the determination of mercury in precipitation, though OSPAR/EMEP reference methods are currently available for mercury in precipitation.

According to the CEN/CENELEC Internal Regulations, the national standards organizations of the following countries are bound to implement this European Standard: Austria, Belgium, Bulgaria, Croatia, Cyprus, Czech Republic, Denmark, Estonia, Finland, France, Germany, Greece, Hungary, Iceland, Ireland, Italy, Latvia, Lithuania, Luxembourg, Malta, Netherlands, Norway, Poland, Portugal, Romania, Slovakia, Slovenia, Spain, Sweden, Switzerland and the United Kingdom.

1 Scope

This European Standard specifies a method for the determination of the total deposition of mercury. This standard can be used within the framework of the European Council Directive on Ambient Air Quality Assessment and Management and Directive 2004/107/EC. Performance requirements with which the method should comply are specified in this European Standard. The performance characteristics of the method were determined in comparative field validation tests carried out at two European locations.

This European Standard is applicable to background sites that are in accordance with the requirements of Directive 2004/107/EC and to urban and industrial sites.

This standard allows the sampling of deposition using cylindrical deposition gauges, and analysis using Cold Vapour Atomic Absorption Spectrometry (CVAAS) or Cold Vapour Atomic Fluorescence Spectrometry (CVAFS) following existing harmonised and standardised procedures. The standard is applicable for the measurement of mercury in deposition between 1 ng/(m^2·d) and 100 ng/(m^2·d).

The standard is validated for the deposition range listed in Table 1.

Table 1 — Working range of this standard method

Working range ng/(m^2·d)	
Lower limit	Upper limit
1	100

NOTE The range given is based upon the values measured in the field validation test. The upper and lower limits are the observed minimum and maximum values measured during the field validation tests. The actual lower limits of the working range depends on the variability of the laboratory blank, for bulk and wet-only collectors, and the precipitation. The method can be applied to higher and lower deposition rates provided that the collection characteristics are not compromised.

2 Normative references

The following referenced documents are indispensable for the application of this document. For dated references, only the edition cited applies. For undated references, the latest edition of the referenced document (including any amendments) applies.

ENV 13005, *Guide to the expression of uncertainty in measurement*

CR 14377, *Air quality — Approach to uncertainty estimation for ambient air reference measurement methods*

EN ISO 17852, *Water quality — Determination of mercury — Method using atomic fluorescence spectrometry (ISO 17852:2006)*

EN ISO 20988, *Air quality — Guidelines for estimating measurement uncertainty (ISO 20988:2007)*

3 Terms, definitions and abbreviations

For the purposes of this document, the following terms, definitions and abbreviations apply.

3.1 Terms and definitions

3.1.1
ambient air
outdoor air in the troposphere, excluding workplace air

3.1.2
atmospheric deposition
mass flow rate (unit of mass per unit of area per unit of time) describing the process of the transfer of any species from the atmosphere to an environmental compartment, e.g. air to water, air to soil

NOTE Atmospheric deposition is the sum of the depositions of sedimenting particles, non-sedimenting particles and gases.

3.1.3
bulk collector
equipment to collect bulk deposition

NOTE Bulk collectors sample deposition at all times. A bulk sampler can consist of a funnel-bottle combination or a wide mouthed jar.

3.1.4
bulk deposition
sum of the deposition of sedimenting wet and dry particles

NOTE Bulk deposition is a part of the atmospheric deposition.

3.1.5
combined standard measurement uncertainty
standard measurement uncertainty that is obtained using the individual standard measurement uncertainties associated with the input quantities in a measurement model

NOTE In case of correlations of input quantities in a measurement model, covariances should also be taken into account when calculating the combined standard measurement uncertainty [ISO/IEC Guide 99 (VIM)].

3.1.6
coverage factor
number larger than one by which a combined standard measurement uncertainty is multiplied to obtain an expanded measurement uncertainty

NOTE A coverage factor is usually symbolized k [ISO/IEC Guide 99 (VIM)].

3.1.7
detection limit (DL), instrumental
lowest amount of an analyte that is detectable using an instrument as determined by repeated measurements of a reagent blank

3.1.8
detection limit (DL), method
lowest amount of an analyte detectable after the whole measurement process as determined by repeated measurements of different field blanks

3.1.9
dry deposition
sum of the deposition of sedimenting dry particles, non sedimenting particles and gases

NOTE Dry deposition includes the following processes: atmospheric turbulent diffusion, adsorption, absorption, impaction and gravitational settling. The dry deposition process is affected by the type of underlying surface and surface conditions. Dry deposition is a part of the atmospheric deposition.

3.1.10
expanded uncertainty
product of a combined standard measurement uncertainty and a factor larger than the number one

NOTE 1 The factor depends upon the type of probability distribution of the output quantity in a measurement model and on the selected coverage probability.

NOTE 2 The term "factor" in this definition refers to a coverage factor.

NOTE 3 Expanded measurement uncertainty is termed "overall uncertainty" in paragraph 5 of Recommendation INC-1 (1980) (see the GUM) and simply "uncertainty" in IEC documents [ISO/IEC Guide 99 (VIM)].

NOTE 4 For the purpose of this document the expanded uncertainty is the combined standard uncertainty multiplied by a coverage factor k = 2 resulting in an interval with a level of confidence of 95 %.

3.1.11
field blank
artificial sample (e.g. de-ionised water) taken through the same procedure as the precipitation sample, except that this has not been exposed to precipitation

NOTE It is transported to the sampling site, mounted in the sampling unit, returned to the laboratory and worked up in the same way as the deposition sample.

3.1.12
laboratory blank
artificial sample (e.g. de-ionised water) taken through the same procedure in the laboratory as the precipitation sample, worked up in the same way as the deposition sample

3.1.13
measurement uncertainty
non-negative parameter characterizing the dispersion of the quantity values being attributed to a measurand, based on the information used

NOTE 1 Measurement uncertainty includes components arising from systematic effects, such as components associated with corrections and the assigned quantity values of measurement standards, as well as the definitional uncertainty. Sometimes estimated systematic effects are not corrected for but, instead, associated measurement uncertainty components are incorporated.

NOTE 2 The parameter may be, for example, a standard deviation called standard measurement uncertainty (or a specified multiple of it), or the half-width of an interval, having a stated coverage probability.

[ISO/IEC Guide 99:2007 (VIM)]

3.1.14
precipitation
rain, snow, sleet, snow pellets ("graupel") and hail

3.1.15
reagent blank
artificial sample (e.g. de-ionised water) processed through the analytical measurement steps

3.1.16
wet deposition
sum of depositions of sedimenting wet particles and droplets

NOTE Wet particles and droplets in the atmosphere undergo the process of scavenging of any gases and/or particles. Wet deposition is a part of the atmospheric deposition.

3.1.17
wet-only collector
equipment to collect wet deposition, typically a funnel-bottle combination

NOTE Wet-only collectors collect only during wet precipitation events

3.2 Abbreviations

CRM Certified Reference Material

CVAAS Cold Vapour Atomic Absorption Spectrometry

CVAFS Cold Vapour Atomic Fluorescence Spectrometry

EMEP Co-operative Programme for Monitoring and Evaluation of the Long-range Transmission of Air pollutants in Europe (European Monitoring and Evaluation Programme)

WMO/GAW World Meteorological Organization/Global Atmosphere Watch

4 Principle of mercury deposition determinations

Atmospheric deposition is defined as the sum of the depositions of sedimenting particles, non-sedimenting particles and gases. Total atmospheric deposition is the sum of dry deposition and wet deposition. Bulk deposition is the sedimenting part of the atmospheric deposition.

There is no method available to determine total atmospheric deposition in one measurement. The determination of the dry deposition requires micrometeorological measurements, taking into account the turbulent atmospheric transport processes. Wet deposition and bulk deposition, however, can be estimated using suitable collectors.

This standard describes methods to determine wet deposition and bulk deposition of mercury using wet-only- and bulk collectors.

The wet-only collector is designed to collect sedimenting water containing wet particles only, while the bulk collector is designed to collect all sedimenting wet and dry particles. However, since the deposition process is affected by various factors, e.g. wind speed, temperature, vegetation, surface type, etc., the wet-only collector will not catch all sedimenting wet particles while some sedimenting dry particles, non-sedimenting particles and gases will be collected. Also, the bulk collector will not catch all sedimenting particles while some non-sedimenting particles and gases will be collected.

The method is divided into two main parts:

a) sampling of precipitation in the field;

b) mercury analysis in the laboratory.

The precipitation sample is stabilized with hydrochloric acid and transferred to the laboratory in the collection vessel. Mercury in the precipitation sample is oxidised using bromine monochloride. Mercury is analysed either by CVAAS or CVAFS detection.

5 Siting requirements for mercury deposition determinations

The following guidelines shall be met as far as practicable (Annex III.II of Directive 2004/107/EC [10]):

a) The site chosen for sampling and measurements shall be representative of a larger area. The size of this area is determined by site characteristic (urban, industrial or rural) and the variability of the air and precipitation quality.

b) The collector shall as far as possible not be exposed to areas where unrepresentative strong winds occur like shores, cliffs and top of hills, but it shall also not be sheltered by tall trees or buildings. The flow

around the collector shall be unrestricted, without any obstructions affecting the airflow in the vicinity of the sampler. The criteria depend on the site characteristic:

1) Rural sites: there shall be no obstacles, such as trees, above 30° from the rim of the precipitation collector, and buildings, hedges, or topographical features which may give rise to updraughts or downdraughts. See EMEP manual [1] for details;

2) Urban and industry sites: one shall seek to meet the same requirements but shall be at least some metres away from buildings, trees and other obstacles.

c) For the deposition measurements in rural background areas, the EMEP guidelines and criteria shall be applied as far as practicable and where not provided for in the guidelines given above.

NOTE The method has not been tested at mining sites or sites with significant presence of particles containing cinnabar (HgS). At such sites the method can be applied provided that the digestion characteristics are not compromised.

6 Reagents

6.1 Concentrated hydrochloric acid, 30 % HCl or 36 to 38 % HCl (low mercury blank required, e.g. Suprapur® [1)] quality).

WARNING — Concentrated hydrochloric acid is corrosive, and hydrogen chloride fumes are an irritant. Avoid exposure by contact with the skin or eyes, or by inhalation of fumes. Carry out the work in a fume cupboard. Use suitable personal protective equipment (including suitable gloves, face shield or safety glasses, etc.) when working with the concentrated or dilute hydrochloric acid.

6.2 Concentrated hydrochloric acid, 37 % HCl (e.g. p.a. quality) for cleaning purposes.

6.3 Ultrapure water, de-ionised water with a resistivity greater than 18 MΩ·cm at 25 °C.

Water shall be monitored for Hg, especially after ion exchange beds are changed.

6.4 Hydrochloric acid, 2 % HCl for cleaning purposes, prepared from concentrated HCl (6.2) by dilution with ultrapure water (6.3).

6.5 Hydrochloric acid, 2 % HCl for for acidification of the precipitation samples, prepared from concentrated HCl (6.1) by dilution with ultrapure water (6.3).

6.6 Potassium bromate ($KBrO_3$), e.g. p.a. quality; if necessary preheated overnight at (240 ± 20) °C to evaporate mercury.

WARNING — Potassium bromate can cause cancer.

6.7 Potassium bromide (KBr), e.g. Suprapur® [1)] quality; if necessary preheated overnight at (240 ± 20) °C to evaporate mercury.

6.8 Bromine monochloride (BrCl) solution.

Dissolve 1,10 g $KBrO_3$ (6.6) and 1,5 g KBr (6.7) by adding to 20 ml ultrapure water (6.3) with careful shaking and heating, if necessary. Afterwards, slowly add 80 ml HCl (6.1) whilst stirring.

To avoid contamination, store in a mercury free environment.

---

1) Suprapur® is an example of a suitable product available commercially. This information is given for the convenience of users of this European Standard and does not constitute an endorsement by CEN of this product.

WARNING — Shall be prepared in a fume hood with great care. Use safety goggles. Large amounts of acid fumes and gaseous free halogens will form and evaporate from the solution.

6.9 Bromine monochloride (BrCl) solution, 0,5 % V/V for cleaning purposes, prepared of Bromine monochloride (BrCl) solution (6.8) by dilution with ultrapure water (6.3).

6.10 Hydroxylammonium hydrochloride solution.

Dissolve 12,0 g $NH_2OH{\cdot}HCl$ in 100 ml water (6.3). This chemical reagent sometimes contains high mercury concentrations. Adding 0,1 g Chelex 100 ion exchange material can lower the mercury content. Blanks shall be checked carefully.

NOTE Instead of hydroxylammonium hydrochloride solution ascorbic acid can be used. Ascorbic acid solution can be prepared weekly by dissolving 10 g of L-ascorbic acid in 100 ml water (6.3).

7 Sampling

7.1 Sampling equipment – General requirements

Use collectors with a defined horizontal opening, either a funnel/bottle combination (see A.1 and A.3) or a wide-mouthed jar (see A.2). The collectors can be bulk samplers, which collect at all times, or wet-only samplers which collect only during wet precipitation events.

If a funnel/bottle collector is used, the funnel shall have a cylindrical vertical section of sufficient height to avoid sampling losses resulting from splashing. If a jar is used, it shall have a sufficient depth to avoid such sampling losses.

Collector dimensions shall be selected with respect to the expected precipitation collected in the sampling period used. Typical sampling periods vary between one week and one month. The funnel area shall be large enough to provide sufficient sample for chemical analysis at a minimum precipitation depth of 1 mm per week.

It is recommended that short sampling periods (weekly) and/or two or three samplers in parallel are used.

The sampling efficiency of funnel/bottle collectors can be checked by comparing the collected precipitation with the precipitation determined using a standard meteorological rain gauge. The difference in precipitation between the standard rain gauge and the heavy metal sample collector shall not be greater than 20 % for precipitation depths between 1 mm to 2,5 mm, and not greater than 10 % for precipitation depths larger than 2,5 mm of precipitation [9]. Checking sampling efficiency is especially important if a wet-only collector is used.

Mercury deposition is collected in special precipitation samplers, which are used only for mercury deposition determinations. All parts of the precipitation collector that are in contact with the sample shall consist of materials that do not alter the mercury content of the sample (e.g. glass, fluorocarbon polymers). Also, all parts of the sampling collectors shall be easy to clean.

In order for the sample not to be contaminated during heavy rain, the rim of the funnel shall be positioned 1,5 m to 2,0 m above the ground level.

NOTE Sample contamination can be caused by insects, bird droppings or other material in the sampling vessels, especially when using extended sampling periods. This is a major drawback to bulk sampling.

For extended sampling periods − especially if HCl is used to preserve the sample during exposure − it is necessary to prevent the diffusion of Hg^0 into the precipitation sample collected, since it could contribute to the mercury content of the sample via oxidation to water-soluble forms. For funnel/bottle collectors this can be done easily by using a capillary tube between the funnel and the bottle.

It is also necessary to shield the sample bottles from light to avoid photo-induced reduction of the mercury in the precipitation sample.

If a funnel/bottle collector with capillary tube is used, add HCl (6.1 or 6.5) to the sampling bottle before exposure in order to stabilize the sample (see 7.3). Do not add acid, if an open jar is used for sampling.

Samplers shall be suitable for all seasons and all climatic conditions. Thus, especially for wet-only collectors, a heating device should be included to melt snow and to prevent the formation of ice in the funnel and bottle during winter. Otherwise, for bulk collectors, an extra large and deep cylindrical jar should be used for snow sampling. It can be useful to cool the samples in locations where high temperatures are expected during summer.

7.2 Sampling equipment − Special requirements for different collector types

7.2.1 Bulk collector: Funnel/bottle combination

Sampling equipment as described in A.1 can be used for sampling.

If a bird ring is needed, it shall be covered by a suitable inert material, e.g. polyethylene. In order to prevent insects, leaves, etc. from entering the collection bottle a sieve made of e.g. polycarbonate can be used. The sieve shall not obstruct the funnel neck.

Funnel/bottle combination bulk collectors can be used at all types of sampling sites.

7.2.2 Bulk collector: Wide-mouthed jar

Sampling equipment as described in A.2 can be used for sampling. If a bird ring is needed, it shall be covered by a suitable inert material, e.g. polyethylene.

Wide-mouthed jar bulk collectors can be used at all types of sampling sites.

7.2.3 Wet-only collector: Funnel/bottle combination

Sampling equipment as described in A.3 can be used for sampling.

Wet only collectors are equipped with an automatic lid, which opens after activation of a precipitation sensor. The sensitivity of the sensor might affect the sampling efficiency. A precipitation of 0,05 mm/h shall be sufficient for the lid opening mechanism to be activated.

Wet-only collectors can be used at all types of sampling sites.

NOTE Especially at industrial sites or at costal sites, corrosion by e.g. reactive gases or sea salts can occur to precipitation sensors based on measuring the electrical conductivity. At such sites it can be useful to use optical sensors.

7.3 Preparation of precipitation collectors

All parts of the precipitation collector that are in contact with the sample shall be cleaned extensively before use. Plastic gloves shall be used during all steps of the cleaning procedure. It is recommended to store cleaned sampling vessels in double plastic bags.

A suitable cleaning procedure is given below.

a) Wash with an alkaline detergent. Rinse thoroughly with ultrapure water;

b) Leach with 2 % HCl (6.4) for one day to two days. This can be done in a polyethylene tank. Rinse thoroughly with ultrapure water;

c) Leach contaminated labware in BrCl solution (6.9). Leave to stand for at least 24 h. Add Hydroxylammonium hydrochloride solution (6.10) to remove BrCl from the solution. Rinse thoroughly with ultrapure water.

NOTE Additional cleaning steps can be necessary.

Pre-addition of HCl to funnel/bottle collectors with a capillary tube: add 5 ml concentrated HCl (6.1) per litre of collector volume. Alternatively add 50 ml of diluted HCl (6.5) per litre of collector volume. Do not add acid if an open jar is used for sampling.

7.4 Sampling and storage procedure

All parts of the deposition collector that are in contact with the sample shall be handled with care in order to avoid contamination during transport and storage. Sample vessels shall only be handled using plastic gloves and it is recommended to keep all vessels in double plastic bags during transport and storage.

At the end of the sampling period, sampling vessels are exchanged. If funnel/bottle collectors are used for weekly (or biweekly) sampling, replace with clean funnels after four weeks. If there is obvious contamination (e.g. bird droppings) visible, replace earlier.

For exchange of samples, bring a new collection vessel to the sampler. Remove the used sample vessel from the sampler and immediately seal it e.g. with a screw cap or a glass stopper. Open a new sampling vessel (bottle or jar) and place it in the sampler.

The complete sample shall be sent to the analysing laboratory in the sampling vessel. The sample shall be weighed in the laboratory. The empty sampling bottle shall be weighed before use and then weighed after the sampling period is finished to determine the mass of the collected sample. This mass is needed for the calculation of the results (see 10.1).

The samples collected in wide-mouthed jar collectors shall be acidified with 5 ml of HCl (6.1) per litre sample after sampling.

Samples shall be refrigerated and kept in the dark if stored. The samples shall be analyzed as soon as possible after sampling. Alternatively, they can be stored for longer periods provided that the long-term stability is proved. This includes the testing of sample blanks stored for corresponding periods.

An example of a suitable sampling procedure for a bulk funnel/bottle collector is described in Annex B.

8 Analysis

For sample preparation and analysis follow the procedures of EN ISO 17852.

NOTE The EMEP manual can also be used for sample preparation and analysis [1].

An example of a suitable procedure is given in Annex C.

9 Quality control

9.1 Introduction

As mercury concentrations in precipitation can be as low as a few nanograms per litre, sample contamination (by accidental contamination or inappropriate handling) can occur easily.

The laboratories determining mercury deposition shall therefore have a QA/QC procedure.

9.2 Reagent blanks, laboratory blanks and field blanks

Field blanks shall be taken regularly to check for potential contamination.

Reagent blanks are part of the normal laboratory QA/QC programme and shall be used for calculating the instrumental detection limit (see 10.2). The laboratory blanks are used in order to identify potential contamination sources in the laboratory. Reagent blanks and laboratory blanks are usually below the detection limit.

Field blanks shall be used to check if there are problems with the procedures and to calculate the method detection limit. Field blanks shall be taken at least four times each year. If the mercury amount in the field blank sample exceeds 20 % of the average mercury amount in the sample during the sampling period, investigate and, if possible, eliminate any identified sources of contamination. If there is evidence of significant contamination, the result of the associated field samples shall be rejected.

9.3 Adsorption and deposition to the funnel walls

In funnel/bottle collectors mercury can adsorb on the surface of the funnel. To investigate this, rinse the funnel with a known volume (e.g. 200 ml 0,5 % (v/v)) hydrochloric acid and collect this solution in a clean, empty sampling bottle. This blank solution shall be treated like a normal precipitation sample. Such funnel blanks shall be taken at least four times each year.

The mercury content of the blank solution shall be compared to that of samples stored in a clean laboratory environment. If the mercury content of the funnel blank exceed 20 % of the mercury values normally measured at the site, measures shall be taken to reduce the blanks (e.g. by exchanging or by cleaning the sampling devices).

9.4 External QA/QC

If laboratories carry out analysis of mercury on a regular basis it is recommended that they participate in a relevant external quality assessment scheme or proficiency testing scheme like participating in laboratory and field intercomparison.

10 Calculation of results

10.1 Calculation of deposition in wet only and bulk collectors

The sample mass is calculated according to Equation (1).

$$m_s = m_{tot} - m_c - m_a \tag{1}$$

where

m_s is the sample mass in kilograms;

m_{tot} is the mass of the collector vessel (bottle or jar) in kilograms (including sample and acid, but without cap);

m_c is the mass of the empty sampling collector (bottle or jar, without cap) in kilograms;

m_a is the mass of acid added to the sampling bottle before sampling in kilograms.

For further calculations it is assumed that the sample collected has a density (ρ) of 1 kg/l:

$$V_s = m_s / \rho \tag{2}$$

where

V_s is the sample volume in litres;

ρ is the density = 1 kg/l.

The concentration of mercury in the precipitation sample is given in nanograms per litre and calculated according to Equation (3). This includes the application of a dilution factor and the correction for the laboratory blank.

NOTE The laboratory blank should be below detection limit.

$$C_{\mathrm{Hg}} = [C_{\mathrm{c}} \times (V_{\mathrm{s}} + V_{\mathrm{r}}) - C_{\mathrm{lb}} \times V_{\mathrm{r}}] / V_{\mathrm{s}} \tag{3}$$

where

C_{Hg} is the concentration of mercury in the precipitation sample given in nanograms per litre;

C_{c} is the concentration of mercury in the acidified and digested sample given in nanograms per litre;

V_{s} is the volume of the precipitation sample given in litres;

V_{r} is the volume of the reagents added to the sample (acid, BrCl solution, etc.) given in litres;

C_{lb} is the concentration of mercury in the laboratory blank solution, given in nanograms per litre.

The mercury deposition is calculated according to Equation (4).

$$D_{\mathrm{Hg}} = \frac{C_{\mathrm{Hg}} V_s}{r^2 \pi t} \tag{4}$$

where

D_{Hg} is the deposition of mercury given in nanograms per square metre per day;

C_{Hg} is the concentration of mercury given in nanograms per litre;

t is the number of days the sampling period lasted;

V_{s} is the sample volume in litres;

r is the radius of collector surface in metres.

10.2 Calculation of detection limits

The instrumental detection limit shall be determined by the replicate analysis of a reagent blank. The method detection limit shall be determined by the analysis of a minimum of seven different field blanks. The detection limit shall be calculated as nanograms per litre.

$$DL = t_{(1-0,05)} \times SD \qquad with \qquad SD = \sqrt{\frac{\sum_{i=1}^{n} (C_{(\mathrm{i})} - \overline{C})^2}{n-1}} \tag{5}$$

where

DL is the detection limit of mercury in nanograms per litre;

SD is the standard deviation of mercury in nanograms per litre;

$t_{(1-0,05)} = t_{95\%}$ is the Student factor for P = 0,95 (one sided distribution);

$C_{(i)}$ is the concentration of the single value i of the reagent blank of mercury in nanograms per litre;

$\overline{C}$ is the concentration of the mean value of the blank of mercury in nanograms per litre;

n is the number of blanks.

11 Estimation of the measurement uncertainty of the method

11.1 General approach

The measurement uncertainty of the concentration of the mercury deposition in ambient air has to fulfil the data quality objective of 70 %, as specified in Directive 2004/107/EC.

The uncertainty (expressed at a 95 % confidence level) of the methods used for the assessment of ambient air concentrations shall be evaluated in accordance with the principles of EN ISO 20988, ENV 13005, ISO 5725, and the guidance provided in CR 14377. The percentages for uncertainty are given for individual measurements, which are averaged over typical sampling times, for a 95 % confidence interval. Fixed and indicative measurements shall be evenly distributed over the year in order to avoid skewing of results.

The uncertainty of the method has been calculated from the results of a series of field trials to:

a) demonstrate that this standard method meets the uncertainty requirements; and

b) provide sufficient information on performance criteria which have to be met to ensure that individual users can also meet the uncertainty requirements.

See Annex D for details of the results of the field trials.

This European Standard uses appropriate parts of EN ISO 20988, CR 14377, ENV 13005, and ISO 5725-2 to produce a framework for assessing uncertainties against target values for individual laboratories (see 11.2). This approach to uncertainty estimation not only provides the user of this standard with a method of calculating his/her own uncertainty; more importantly it provides guidance as to the major uncertainty contributions to this method and identifies:

c) the maximum allowable level for each of these contributions;

d) the maximum level for each contribution if the target overall uncertainty is to be met.

11.2 Assessment against target measurement uncertainty and uncertainty estimation for individual laboratories

In the field trial three main factors contributing to measurement uncertainty were identified: analysis, sampling and systematic bias between sampler types. It is not expected that users shall perform an extensive field trial; however, some important uncertainty parameters shall be assessed by all laboratories. This includes an estimate of the uncertainty of the sampling and analytical procedure. An additional uncertainty component accounting for other contributions experienced in the field trial shall also be added.

The measurement uncertainty shall be less than or equal to 70 %, the minimum data capture shall be 90 %, and the minimum time coverage shall be 33 %, as specified in the data quality objectives of Directive 2004/107/EC. To be able to meet the uncertainty criteria the candidates shall meet the following performance criteria:

— sampling uncertainty shall be below 20 %.This shall be assessed by using duplicate or triplicate parallel sampling. The in-between sampler standard uncertainty shall be calculated using the guidelines from EN ISO 20988;

— the analytical uncertainty shall be below 20 %. This shall be calculated from laboratory inter-calibration test and using CRM. The standard uncertainty shall be calculated using the guidelines from EN ISO 20988;

— an additional uncertainty component of 20 % shall be added to account for possible systematic bias, determined in the field trials described in Annex D, not fully covered by the two above points, e.g. choice of collector and precipitation. The individual laboratories may otherwise calculate these contributing uncertainties by doing their own tests.

NOTE These performance criteria are only valid for the mercury deposition range given in Table 1.

12 Performance characteristics determined in field tests

12.1 General

The performance characteristics given in this clause are based upon the data gathered in the tests carried out to validate this method. The field validation tests were carried out at two measurement sites (one industrial and one remote site). These tests included all steps covering sampling, sample preparation and analysis of the samples. The results from these tests are used to estimate the measurement performance characteristics.

12.2 Method detection limit

The detection limit obtained by the participating laboratories is given in Table 2.

Table 2 — Detection limit as mercury concentration in field blanks, nanograms per litre

	CVAAS/CVAFS ng/l
Hg	1,0

During the field trials the detection limit, expressed in nanograms per square metre per day, was calculated using the values of mercury concentration in field blanks, multiplied with the minimum detectable precipitation (1 mm) (7.1), divided by the number of sampling days (seven days) (see Table 3).

Table 3 — Detection limit as mercury deposition, nanograms per square metre per day

	CVAAS/CVAFS ng/(m²·d)
Hg	0,14

12.3 Estimated expanded uncertainty

For the two field trials the procedure described in D.3 yielded expanded uncertainties at the 95 % confidence interval of:

— rural site: 44,2 % at an average deposition value of 17 ng/m^2·d;

— industrial site: 39,8 % at an average deposition value of 30 ng/m^2·d.

The field trial demonstrated that the standard method meets the uncertainty requirements described by Directive 2004/107/EC of 70 % uncertainty for the deposition measurement.

13 Reporting of results

13.1 Reporting results

Results shall be reported as the deposition D_{Hg} as mass of mercury per unit area and per time. The unit used to express the deposition shall be nanograms per square metre per day, ng/(m^2·d).

When reporting the result of a measurement, and when the uncertainty quoted is the expanded uncertainty one shall:

a) state the result of the measurement as $y \pm U$, where y is the measurement result and U is the expanded uncertainty, and give the units of y and U;

b) give the value of the coverage factor k used to obtain U and the approximate level of confidence this factor confers on the interval $y \pm U$.

13.2 Measurement report

A report describing the measurement of mercury in deposition shall contain at least the following information:

— reference to this European Standard and supplementary standards;

— complete identification of the sample(s);

— type of analytical instrument and sampling equipment used;

— identification of each sampling location;

— sampling time period;

— results of the determinations expressed in ng/(m^2·d);

— expanded uncertainty and how this was calculated;

— method detection limits expressed in ng/(m^2·d);

— any unusual features noted during the determination;

— any deviations from this European Standard.

Annex A
(informative)

Sampling equipment that can be used for precipitation sampling

A.1 Bulk collector (funnel/bottle combination)

An example of a suitable bulk collector with funnel/bottle combination is shown in Figure A.1.

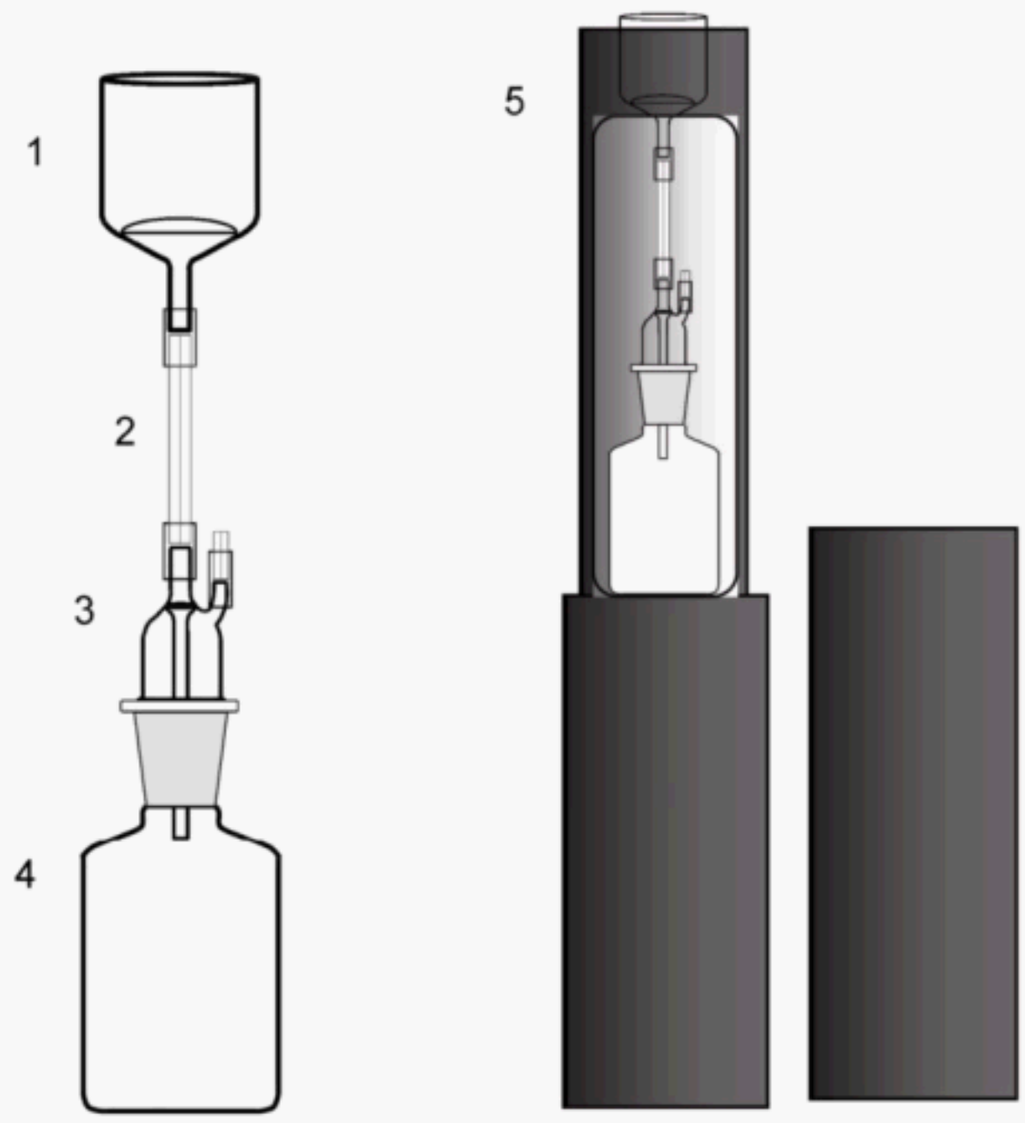

Key
1 glass funnel (diameter: ≈ 80 mm, height: 90 mm)
2 glass capillary (length: 0,2 m to 0,3 m, inner diameter: 2 mm)
3 gas wash bottle head equipped with a 20 mm long capillary with 0,4 mm inner diameter
4 receiver bottle (volume: 500 ml)
5 protective housing (length: 1,5 m)

NOTE On the left: sampling equipment made from Borosilicate glass. On the right: protective housing made from polypropylene. The housing is electrically heated during winter to protect from freezing.

Figure A.1 — Schematic of a bulk sampler

A.2 Bulk collector (wide-mouthed jar)

An example of a suitable wide-mouthed jar type bulk collector is shown in Figure A.2.

Dimensions in millimetres

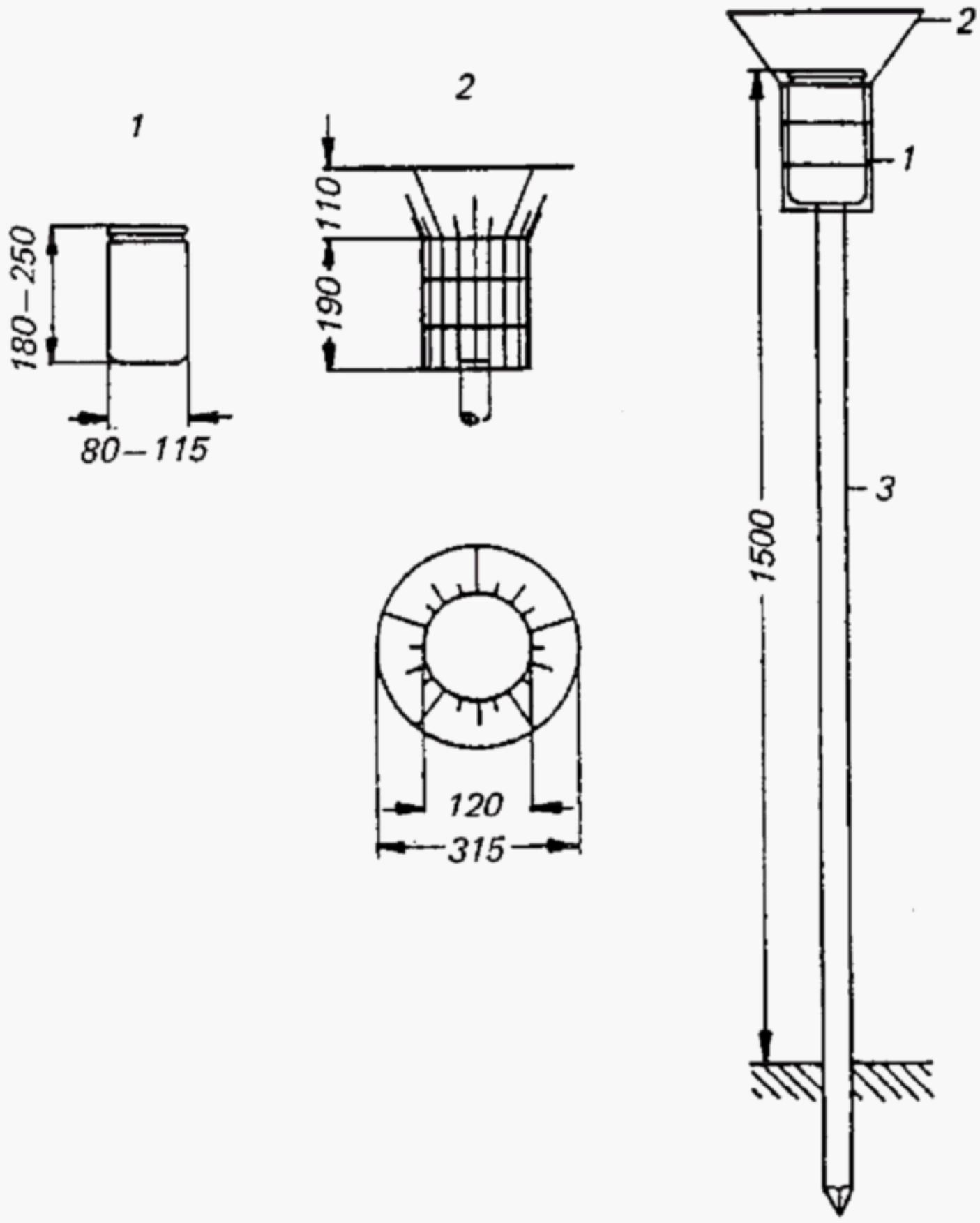

Key

1 collecting pot
2 protective basket (with bird ring)
3 post

Figure A.2 — Schematic of wide mouthed jar bulk collector

NOTE It is essential to shield the sample bottles from light to avoid photo-induced reduction of the mercury in the precipitation sample.

A.3 Wet-only collector (funnel/bottle combination)

An example of a suitable wet-only collector with funnel/bottle combination is shown in Figure A.3.

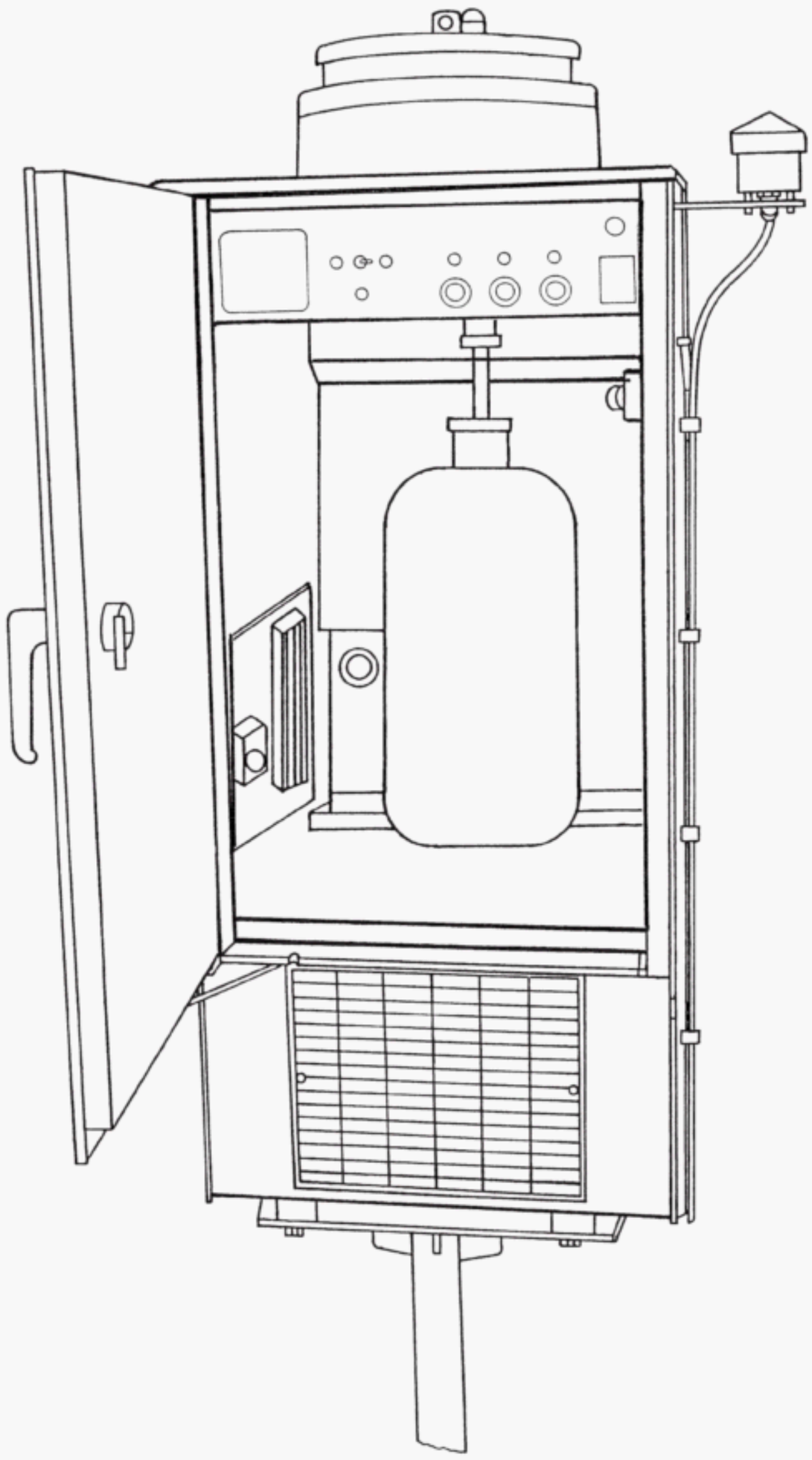

Dimensions
Height of collection area: ± 1 600 mm
Diameter of funnel: 240 mm
Size of collection bottle: ± 2 l to 5 l

Figure A.3 — Schematic of wet-only collector

Annex B
(informative)

Sampling procedure

B.1 Bulk collector (funnel/bottle combination)

An example of a suitable sampling procedure using a bulk collector with funnel/bottle combination (see A.1) as described in the EMEP manual [1] is given here. For alternative sampling devices, this procedure shall be adapted.

All samples and replacement sample bottles shall be handled with care in order to avoid contamination during transport and storage. Sample bottles shall only be handled using plastic gloves and all bottles shall be kept in double plastic bags during transport and storage.

Before sending the precipitation bottle (500 ml) to the field 2,5 ml of concentrated HCl (6.1) or 25 ml of 2 % HCl (6.5) shall be added to the bottle.

The procedure described below is for the bulk sampler shown in Figure A.1:

a) bring a new collection bottle, plastic bags and container with high purity water to the sampler. All equipment needed for the bottle exchange shall be placed on a plastic cover either on the ground or available surface;

b) remove the outer plastic tube;

c) open the double bags of the new collection bottle (but leave the bottle in the bags);

d) carefully remove the ground glass joint connecting the bottle to the capillary. Use both hands, one for loosening the glass fitting the other for holding the funnel;

e) remove the stopper from the new collection bottle and close the bottle containing the precipitation sample. This bottle is then put in double plastic bags;

f) before mounting the new bottle, rinse the funnel and capillary with high purity water. If visible materials (dust, insect, etc.) are present, disconnect the funnel from the capillary and rinse separately. New plastic gloves shall be used if handling the watch glass or touching the inside of the funnel is necessary. If the funnel and capillary are visibly dirty even after rinsing, they shall be exchanged with newly washed pieces;

g) remove the new collection bottle from the plastic bags and place in the plastic casing. Connect the ground glass fitting and check all connections. Make sure that silicon tubing is exposed to the precipitation sample as little as possible;

h) replace the outer plastic tube.

Samples to be stored shall be refrigerated and kept in the dark. They may be stored up to 6 m provided that the long-term stability is checked. This also applies for the storage and testing of sample blanks.

B.2 Additional cleaning procedure for cleaning Teflon vessels

a) Fill the vessels with an alkaline detergent for one day. Rinse thoroughly with de-ionised water;

b) fill the vessels with 50 % HNO_3 solution prepared from concentrated HNO_3 by dilution with water 1:1. Heat the vessels at 60 °C for two days;

c) rinse thoroughly with water;

d) fill the vessels with 10 % HCl solution (prepared from concentrated HCl by dilution with water for one day (at least) at room temperature;

e) rinse thoroughly with water;

f) fill the vessels with 1 % to 2 % HCl solution and store the vessels in double plastic bags.

Annex C
(informative)

Analytical procedure

C.1 Introduction

An example of a suitable analytical procedure using cold vapour atomic fluorescence spectrometry (CVAFS) or cold vapour atomic absorption spectrometry (CVAAS) as described in the EMEP manual [1] is given here.

C.2 Instrumentation

The most common procedure for the analysis of mercury in precipitation is oxidation with BrCl, pre-reduction with $NH_2OH{\cdot}HCl$ followed by reduction of the aqueous Hg to Hg^0, purging onto gold traps and thermal desorption and detection using CVAAS or CVAFS.

The most reliable technique for the analysis of mercury is CVAFS. CVAAS may be used but requires larger sample volumes due to higher detection limit. AFS and AAS instruments are available from a number of different manufacturers. The analysis procedure can be performed in manual or automated modes.

Borosilicate glass and/or Teflon are the recommended materials for the flasks where mercury is reduced and volatilised for the pre-concentration step. Acid-washed Teflon tubing shall be used. Ordinary polyethylene or rubber tubing is not suitable.

C.3 Reagents and standards (additional to Clause 6)

C.3.1 General

Reagents and water may contain mercury as a trace impurity. To ensure low blanks use ultra-pure reagents with low mercury content in all cases.

C.3.2 Laboratory air

All glassware and samples shall be handled in a laboratory containing low concentrations of mercury. A clean bench or some other clean zone arrangement shall be used for handling reagents, for sample treatment and for the drying of glassware.

C.3.3 Hg-free nitrogen/Hg-free argon

The gas shall go through a gold trap or activated carbon filter prior to use.

C.3.4 Purging flasks for $SnCl_2$ reduction (bubblers)

Acid-cleaned borosilicate glass wash-bottles or Teflon bubblers are used.

C.3.5 Stannous chloride solution

Dissolve 20 g $SnCl_2 \cdot 2H_2O$ in 100 ml HCl (6.1) and dilute to 1 l with ultrapure water (6.3). Purge this solution with mercury-free N_2 for 2 h and then store it in the dark. Aliquots of 100 ml may be removed and used as working solutions for analysis.

NOTE Stannous chloride solution can also be prepared by adding 250 ml of H_2SO_4 (96 %, e.g. Suprapur® [2)] quality) in 750 ml of water (6.3) very slowly while cooling. When this solution has cooled add 50 g of $SnCl_2 \cdot 2H_2O$. Purge this solution with mercury-free N_2 for 1 h.

C.3.6 Mercury calibration solution

Standard solutions can be prepared from commercially available mercury standards. A parallel check using two standard solutions of different origin is recommended. One of these can be made from pure chemicals (e.g. Hg_0 dissolved in concentrated HNO_3 and diluted to the appropriate volume).

C.4 Sample pre-treatment

The collected samples are preserved with HCl prior to storage or during sampling. Before analysis a chemical oxidation step is performed using BrCl. This reagent efficiently converts stable mercury to form a water-soluble species that can be easily reduced by $SnCl_2$. Before analyzing the sample, excess BrCl is removed using a mild reducing agent such as $NH_2OH \cdot HCl$ or ascorbic acid. Analyse within 8 h after adding the reducing agent.

Acidified precipitation samples, especially those collected at industrial and polluted urban sites or at rural sites in Southern and Central Europe, can contain non-dissolved material. To ensure complete digestion, such non-homogenous samples shall be digested in the sampling vessel.

NOTE To avoid problems with the analytical instrument, it may be necessary to filter the samples before analysis.

C.5 Preparation of reducing vessels

Fill the wash bottles with about 50 ml water containing 2,5 ml of the $SnCl_2$ solution and 2 ml 30 % HCl. Purge the solution with N_2 for 20 min before checking the bubbler blank value.

At the end of each day, the bottles shall be rinsed thoroughly with de-ionised water and then filled (at least covering the glass frit) with Aqua Regia until use. Before starting the next set of analyses, the Aqua Regia shall be transferred to a storage bottle (Aqua Regia can be re-used for up to a month) and the reduction vessel rinsed, first with de-ionised water and then with high purity water (e.g. Milli-Q® [2)]).

C.6 Reduction step

The bubbler blank value shall be checked by connecting a gold trap to the bubbler and purging the solution with N_2 for 20 min, then analyzing the mercury collected. The mercury collected on the gold trap is the bubbler blank and shall not exceed a few picograms.

In all collection and purging steps, a glass tube containing baked quartz wool shall be connected between the bottle and the gold trap to avoid exposing the gold surface to droplets of acid solution.

---

2) Suprapur® and Milli-Q® are examples of suitable products available commercially. This information is given for the convenience of users of this European Standard and does not constitute an endorsement by CEN of these products.

After the bubbler blank has been checked, a clean gold trap shall be connected to the outlet and an aliquot of the pre-treated precipitation sample added to the bubbler flask. The bubbler flask shall then be placed on an electronic balance and the amount of added sample weighed. The reduction and purging shall be allowed to proceed for 10 min to 20 min.

C.7 Detection

The traps shall be dried at about 40 °C in a mercury-free N_2 flow for 5 min prior to analysis. They shall then be connected to the AFS detector with a helium gas flow. The mercury is then thermally desorbed either directly into the detector or onto an analytical trap. If an analytical trap is used, a second heating step shall be performed before the detection. The advantage of the dual amalgamation is that the influence of any interfering substances adsorbed on the first trap may be reduced and also that the mercury adsorbed onto the second analytical trap will be more easily desorbed and a sharper peak obtained.

After the analytical step the gold trap shall be allowed to cool. It shall then be removed from the gas stream and sealed with Teflon plugs. It shall be stored in a plastic bag if not immediately used again.

C.8 Analysis with automated mercury analyzers

Analysis can also be performed using automated mercury analyzers based on the manual method described above. However, automated mercury analyzers may require slightly different reagents and procedures. In this case, the procedure above can be adapted.

An example of an automated mercury analyzer is given in Figure C.1.

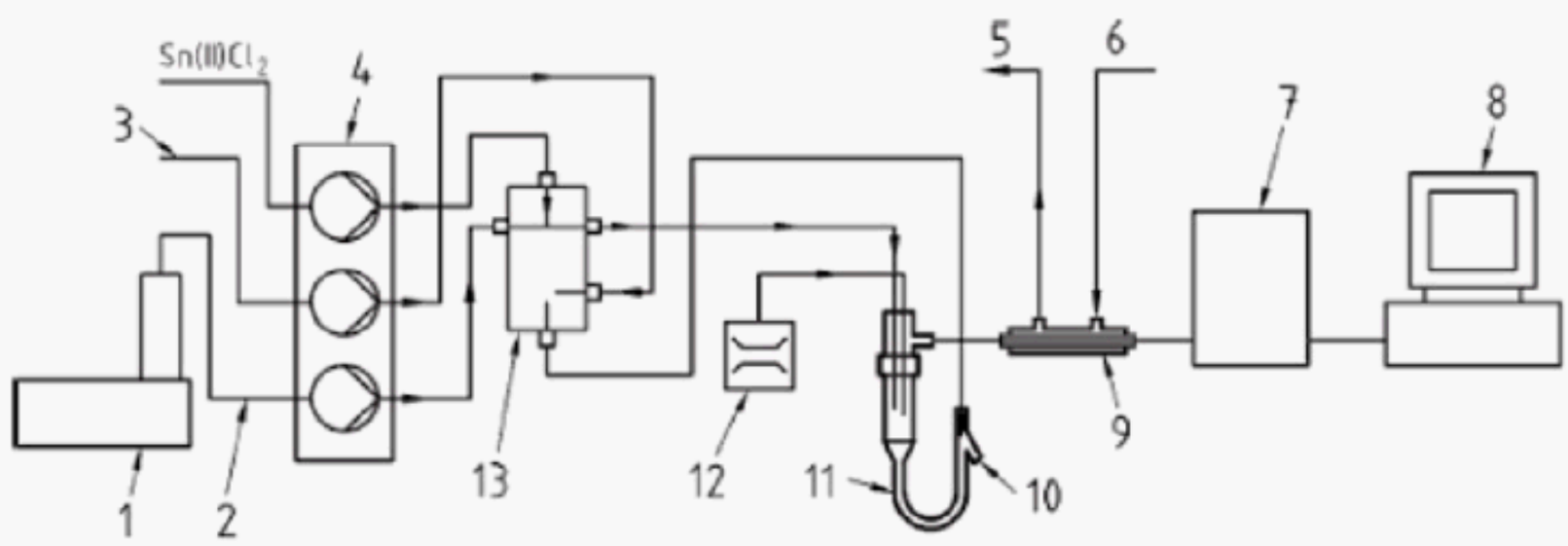

Key
1 autosampler
2 sample
3 blank
4 peristaltic pump
5 dryer gas out
6 dryer gas in
7 fluorescence detector
8 computer
9 hygroscopic dryer tube
10 waste
11 gas/liquid separator
12 argon carrier gas rotameter
13 switching valve; sample position; selects sample standards or blank

NOTE This continuous flow vapour generator consists of a constant speed peristaltic pump to deliver tin (II) chloride reagent blank and sample. A switching valve alternates between the reagent blank and sample or standard solutions. The vapour generator switches between reagent and sample solution on a prescribed sequence so that the measured signal is directly related to the mercury content of mercury in the sample.

Figure C.1 — Schematic block diagram

C.9 Calibration

Standard solutions can be prepared from commercially available mercury standards. Calibration shall be performed by using four standards in each run.

C.10 Quality control – Quality assurance

The calibration step is critical. In general, the basic principle is always to use two independent calibration solutions. One of these can be made from pure chemicals (e.g. Hg^0 dissolved in concentrated HNO_3 and diluted to the appropriate volume). For mercury, commercially available standard solutions can be used but regular checks against a reference standard shall be made. Certified reference materials shall be used if available, but reference standards can also be prepared from pure mercury compounds. Traceability is an important step and all standard solutions shall be regularly checked against a reference material. In the absence of aqueous phase reference standards, solid materials may be used. As an independent check on the analytical results, an Hg^0 vapour source can be used consisting of liquid mercury in an enclosed vessel from which vapour samples can be drawn with a gas tight syringe.

C.11 Summary

Table C.1 — Summary analytical procedure

Analytical step	Recommendation	Acceptable alternatives
Sample pre-treatment	BrCl oxidation, $NH_2OH{\cdot}HCl$ pre-reduction	Ascorbic acid
Pre-concentration	$SnCl_2$ reduction, purging, collection on gold traps	
Detection	CVAFS	CVAAS
Detection limit	< 1 ng/l	
QA/QC	Blank determinations, use of traceable reference materials	

C.12 Calculation of Hg(tot) from manual analysis

Before analysis the samples are oxidised by adding a bromine monochloride (BrCl) solution to the entire precipitation sample. Remaining BrCl is neutralised by adding a hydroxylamine hydrochloride ($NH_2OH{\cdot}HCl$) solution, according to method 1631 [8]. Both these solutions contain small amounts of mercury. Hence, the mercury concentration in each batch of BrCl and $NH_2OH{\cdot}HCl$ solutions need to be determined to perform a correction. The BrCl addition also has a dilution effect that needs to be considered.

Preparation of working standard from NIST standard solution is made in two dilution steps. BrCl solution is added in each dilution step, see method 1631 [8] for details. The concentration of the working standard is calculated using Equation (C.1).

$$w_{\mathrm{Hg,w}} = \frac{w_{\mathrm{Hg,NIST}} \times \frac{m_1}{m_2} \times m_3}{m_4} \qquad \text{(C.1)}$$

where

$w_{\mathrm{Hg,w}}$ is the mass fraction of the prepared working Hg standard in nanograms per gram;

$w_{\mathrm{Hg,NIST}}$ is the mass fraction of the undiluted NIST Hg standard solution in nanograms per gram;

m_1 is the mass of the undiluted NIST Hg standard solution collected to prepare the first dilution in grams;

m_2 is the total mass of the first dilution in grams;

m_3 is the mass of the first dilution collected to prepare the final working standard solution in grams;

m_4 is the total mass of the final working standard solution in grams.

$$RF = \frac{R_s - B_B}{m_s \times w_{Hg,w}} \quad (C.2)$$

where

RF is the signal response factor in 1/ng;

R_S is the signal response from analysis of standard (integrated signal area);

B_B is the bubble blank; signal from bubbler without addition of standard or sample (integrated signal area);

m_S is the mass of working Hg standard used for calibration in grams.

$$B_C = V_{BrCl} \times C_{Hg,BrCl} \frac{V_s \times RF}{V_{tot}} \quad (C.3)$$

where

B_C is the chemical blank in respect to Hg expressed as integrated signal area;

V_{BrCl} is the volume of BrCl + $NH_2OH{\cdot}HCl$ solution added to the sample in millilitres;

$C_{Hg,BrCl}$ is the Hg concentration of the BrCl solution after neutralisation by an equal amount of $NH_2OH{\cdot}HCl$ solution in nanograms per millilitre;

V_s is the volume of the sample analysed in millilitres;

V_{tot} is the total sample volume including added BrCl and $NH_2OH{\cdot}HCl$ solutions in millilitres.

$$V'_s = \frac{V_{tot} - V_{BrCl}}{V_{tot}} \times V_s \quad (C.4)$$

$$C_{Hg} = \frac{R_x - B_C}{RF \times V'_s} \quad (C.5)$$

where

C_{Hg} is the Hg(tot) concentration of the sample in nanograms per millilitre;

V'_s is the volume of sample analysed corrected for dilution by BrCl and $NH_2OH{\cdot}HCl$ in millilitres;

R_x is the integrated signal area from analysis of sample.

After calculating Hg(tot) the values shall be corrected for dilution in respect to pre-addition of acid.

Annex D
(informative)

Summary of field trial validation tests

D.1 Introduction

The performance characteristics listed in this clause are based upon the data gathered in field tests carried out to validate this standard method. Sampling was undertaken at two locations, over seven-month periods. Bulk, wet-only and wide-mouthed jar samplers were run in parallel collecting weekly samplers (occasionally monthly samples in the case of the wide-mouthed jar samplers). The characteristics of the two sites were chosen in order to obtain as much information as possible on the performance of the method under different ambient and meteorological conditions.

D.2 Locations

D.2.1 Site 1

Site: Background site (coastal).

Sampling period: December 2006 – July 2007.

D.2.2 Site 2

Site: The sampling site was located approximately 2 km NE-E from a power plant, between coal ash landfill expanding towards the NW , a coal mine to the South and a freshwater lake to the East.

Sampling period: January 2007 to September 2007.

The number of samplers at each field trial location, and the total number of samples collected was as follows:

— Site 1: 3 bulk (59 samples), 2 wet-only (38 samples), and 4 wide-mouthed jar (32 samples) samplers;

— Site 2: 2 bulk (37 samples), 2 wet-only (36 samples), and 4 wide-mouthed jar (40 samples) samplers.

The approximate data capture rates at each site were as follows:

— Site 1: 96 %;

— Site 2: 94 %.

Results were expressed in nanograms per square metre per day.

D.3 Uncertainty estimation from field trial process

The theory underpinning the field trial process is that the mean value yielded by several different types of sampler at different location when measuring different mercury deposition rates represent the best estimate of the "true value" of the mercury deposition rate, and in general the spread of these results is a good estimate of the uncertainty in the mean value. Both the random and non-random contributions to the uncertainty are considered by the general form:

$$u_c(\gamma) = \sqrt{u_r^2(\gamma) + u_s^2(\gamma)} \quad \text{(D.1)}$$

where

$u_c(\gamma)$ is the relative combined uncertainty of the mercury deposition;

$u_r^2(\gamma)$ is the relative random contribution to this uncertainty;

$u_s^2(\gamma)$ is the relative non-random contribution to this uncertainty.

Each field trial consists of M parallel samplers operating over N days. The data produced by each sampler was averaged to produce a daily mercury deposition rate value $\gamma_{d,i}$ on day d from instrument i. Therefore we can define the terms:

$$\gamma = \frac{1}{N}\sum_{d=1}^{N}\bar{\gamma}_d \quad \text{(D.2)}$$

$$\bar{\gamma}_d = \frac{1}{M}\sum_{i=1}^{M}\gamma_{d,i} \quad \text{(D.3)}$$

$$\delta_{d,i} = \gamma_{d,i} - \bar{\gamma}_d \quad \text{(D.4)}$$

$$\bar{\delta}_i = \frac{1}{N}\sum_{d=1}^{N}\delta_{d,i} \quad \text{(D.5)}$$

$$\sigma_i = \sqrt{\frac{\sum_{d=1}^{N}(\delta_{d,i} - \bar{\delta}_i)^2}{N-1}} \quad \text{(D.6)}$$

where

γ is the mean mercury deposition rate over all N days and across all M samplers;

$\bar{\gamma}_d$ is the mean mercury deposition rate on day d across all M samplers;

$\delta_{d,i}$ is the deviation of sampler i from the mean mercury deposition rate on day d;

$\bar{\delta}_i$ is the mean deviation of sampler i from the mean mercury deposition rate over all N days;

σ_i is the standard deviation of the deviation of sampler i over all N days.

It follows that the random contribution to the relative combined uncertainty from sampler i, $u_{r,i}^2(\gamma)$, is given by:

$$u_{r,i}(\gamma) = \frac{\sigma_i}{\gamma\sqrt{N}} \quad \text{(D.7)}$$

and that the non-random contribution to the relative combined uncertainty from sampler i, is given by:

$$u_{s,i}(\gamma) = \sqrt{\left(\frac{\bar{\delta}_i}{\gamma}\right)^2 + u_{i,vol}^2} \tag{D.8}$$

where

$u_{i,vol}$ is the uncertainty in the sampled volume for sampler i.

The relative combined uncertainty from sampler i, is given by:

$$u_{\mathrm{c,i}}(\gamma) = \sqrt{u_{\mathrm{r,i}}^2(\gamma) + u_{\mathrm{s,i}}^2(\gamma)} \tag{D.9}$$

and $u_c(\gamma)$, the relative combined uncertainty at each field trial site is then given by:

$$u_{\mathrm{c}}(\gamma) = \frac{1}{M}\sum_{\mathrm{i=1}}^{M} u_{\mathrm{c,i}}(\gamma) \tag{D.10}$$

The relative combined uncertainties at each field trial site were plotted against average mercury deposition rate γ at each site to provide a means of estimating uncertainty at a range of concentrations by extrapolation.

The relative expanded uncertainty U is then calculated by using a coverage factor k, corresponding to a level of confidence of approximately 95 %, thus:

$$U = k \times u_{\mathrm{c}}(\gamma) \tag{D.11}$$

For the field validation tests $k = 2$ (based on > 30 degrees of freedom).

The relative expanded uncertainties at each field trial site were plotted against average mercury deposition rate γ at each site as a means of estimating uncertainty at a range of concentrations by extrapolation.

D.4 Results

During the analysis of the data from the deposition trial, variation both within and between sampler types has been investigated. When variation between sampler types has been examined, the average value produced by samplers of the same type has been considered in the analysis. Whilst the majority of samples collected were analysed by the co-ordinating laboratory, a subset was sent to a second laboratory so that an indication of the uncertainty associated with the analysis procedure could be estimated, since these data are not explicitly included in EN ISO 17852.

The random and non-random bias within groups of samplers during the field trials is given in the tables below.

Table D.1 — The average random and non-random bias between and within groups of samplers during the field trial on Site 1

Sampler type	Average deviation between sampler type	
	Random	Non-random
Wet-only	5,9 %	3,5 %
Bulk	7,0 %	4,1 %
Wide-mouthed jar	10,7 %	0,9 %
Sampler type	**Average deviation within sampler type**	
	Random	**Non-random**
Wet-only	1,3 %	0,7 %
Bulk	6,2 %	12,1 %
Wide-mouthed jar	11,5 %	10,9 %

Table D.2 — The average random and non-random bias between and within groups of samplers during the field trial on Site 2

Sampler type	Average deviation between sampler type	
	Random	Non-random
Wet-only	12,2 %	9,6 %
Bulk	7,7 %	9,4 %
Wide-mouthed jar	9,0 %	19,0 %
Sampler type	**Average deviation within sampler type**	
	Random	**Non-random**
Wet-only	3,5 %	4,2 %
Bulk	3,6 %	0,4 %
Wide-mouthed jar	7,2 %	1,7 %

For the two field trials the procedure described in D.3 yielded expanded uncertainties at the 95 % confidence interval of:

— Site 1: 44,2 % at an average deposition value of 17 $ng/m^2 \cdot d$;

— Site 2: 39,8 % at an average deposition value of 30 $ng/m^2 \cdot d$.

In order to meet the data quality objectives of the Fourth Daughter Directive a maximum expanded uncertainty of 70 % for the measurement method is permitted. In order to determine the lowest mercury deposition rate at which this required uncertainty is met the individual uncertainties from each sampling period over the two field trials were extrapolated to estimate how the expanded measurement uncertainty is expected to vary with mercury deposition rate. This process predicts that the expanded measurement uncertainty will reach 70 % at a mercury deposition rate of approximately 1 $ng/m^2 \cdot d$.

Therefore, this can be proposed as the lower range of the method. This value represents the best estimate of the lower range of the method given the data available, but shall only be treated as an estimate because of the relatively poor fit of the data extrapolations.

The normalised relative mercury deposition rates for each sampler type during the field trials were as follows:

Table D.3 — Normalised relative mercury deposition rate measured by each collecting device at each of the two field trial locations, and in the field trials overall

Location	Normalised Relative Mercury Deposition Rate		
	Wide-mouthed jar	Wet only	Bulk
Site 1	1,00	0,94	0,97
Site 2	0,77	1,00	0,97
Overall	0,90	1,00	1,00

The data in Table D.3 shows that all three samplers agreed well on Site 1. On Site 2 the wet-only and bulk samplers agreed well, but the wide-mouthed jar samplers showed a large negative bias. Overall the wet-only and bulk samplers agreed very well, and the wide-mouthed jar showed a 10 % negative bias.

Annex E
(informative)

Relationship between this European Standard and the Essential Requirements of EU Directives

This European Standard has been prepared under a mandate given to CEN by the European Commission and the European Free Trade Association and supports Essential Requirements of the Council Directive on Ambient Air Quality Assessment and Management [11] and the Council Directive 2004/107/EC [10].

WARNING — Other requirements and other EU Directives may be applicable to the product(s) falling within the scope of this standard.

Bibliography

[1] EMEP manual for sampling and analysis, CEN/TC 264 rev, NILU, Kjeller, Norway: http://www.nilu.no/projects/ccc/manual/index.html

[2] WMO (1971) Guide to meteorological instrument and observing practices. Geneva, World Meteorological Organization (WMO No. 8 TP 3)

[3] VDI Guideline 2119, part 2, *Measurement of Particulate Precipitations, determination of Dust Precipitation with Collecting Pots made of Glass (Bergerhoff Method) or Plastic*

[4] Eigenbrodt Instruction Manual Precipitation Collector NSA 181 / KE

[5] Liang, L.; Bloom, N.S.; Determination of Total Mercury by Single-Stage Gold Amalgamation with Cold Vapor Atom Spectrometric Detection, J. Anal. Atomic Spectrom. 1993, 8, 591

[6] JAMP Guidelines for the sampling and analysis of mercury in air and precipitation, OSPAR Monitoring guidelines Ref.No: 1997-8 : http://www.ospar.org/documents/dbase/decrecs/agreements/97-08e.doc

[7] Bloom, N.S.; Fitzgerald, W.F.; Determination of Volatile Mercury Species at the Picogram Level by Low-Temperature Gas Chromatography with Cold-Vapor Atomic Fluorescence Detection, Anal. Chim. Acta. 1988, 208, 151

[8] Method 1631, Revision E: Mercury in Water by Oxidation, Purge and Trap, and Cold Vapor Atomic Fluorescence Spectrometry

[9] WMO 2004. Manual for the GAW precipitation programme. Guidelines, Data Quality Objectives and Standard Operating Procedures. WMO TD No. 1251. WMO/GAW Report nr 160

[10] Council Directive 2004/107/EC of the European Parliament and of the Council of 15 December 2004 relating to arsenic, cadmium, mercury, nickel and polycyclic aromatic hydrocarbons in ambient air; Official Journal L 23, 26/1/2005 P. 0003 – 0016

[11] Council Directive 96/62/EC of 27 September 1996 on ambient air quality assessment and management

[12] EN 1483, *Water quality — Determination of mercury — Method using atomic absorption spectrometry*

[13] ISO 5725-2, *Accuracy (trueness and precision) of measurement methods and results — Part 2: Basic method for the determination of the trueness of a standard measurement method*

[14] ISO/IEC Guide 99:2007, *International vocabulary of metrology — Basic and general concepts and associated terms (VIM)*