BRITISH STANDARD

BS EN 15470:2007

Liquefied petroleum gases — Determination of dissolved residues — High temperature Gas chromatographic method

The European Standard EN 15470:2007 has the status of a British Standard

ICS 75.160.30

NO COPYING WITHOUT BSI PERMISSION EXCEPT AS PERMITTED BY COPYRIGHT LAW

European Committee for Standardization
Provided by IHS under license with CEN
No reproduction or networking permitted without license from IHS

Licensee=Sichuan Institute of Standardization 5988943
Not for Resale, 2015/2/2 20:00:32

British Standards

National foreword

This British Standard is the UK implementation of EN 15470:2007.

The UK participation in its preparation was entrusted to Technical Committee PTI/15, Natural gas and gas analysis.

A list of organizations represented on this committee can be obtained on request to its secretary.

This publication does not purport to include all the necessary provisions of a contract. Users are responsible for its correct application.

Compliance with a British Standard cannot confer immunity from legal obligations.

This British Standard was published under the authority of the Standards Policy and Strategy Committee on 31 December 2007

© BSI 2007

ISBN 978 0 580 56657 8

Amendments issued since publication

Amd. No.	Date	Comments

European Committee for Standardization
Provided by IHS under license with CEN
No reproduction or networking permitted without license from IHS

Licensee=Sichuan Institute of Standardization 5988943
Not for Resale, 2015/2/2 20:00:32

EUROPEAN STANDARD

NORME EUROPÉENNE

EUROPÄISCHE NORM

EN 15470

November 2007

ICS 75.160.20

English Version

Liquefied petroleum gases - Determination of dissolved residues - High temperature Gas chromatographic method

Gaz de pétrole liquéfié - Détermination des résidus dissous - Méthode par chromatographie en phase gazeuse, à haute température

Flüssiggase - Bestimmung der gelösten Rückstände - Hochtemperatur-Gaschromatographie-Verfahren

This European Standard was approved by CEN on 7 October 2007.

CEN members are bound to comply with the CEN/CENELEC Internal Regulations which stipulate the conditions for giving this European Standard the status of a national standard without any alteration. Up-to-date lists and bibliographical references concerning such national standards may be obtained on application to the CEN Management Centre or to any CEN member.

This European Standard exists in three official versions (English, French, German). A version in any other language made by translation under the responsibility of a CEN member into its own language and notified to the CEN Management Centre has the same status as the official versions.

CEN members are the national standards bodies of Austria, Belgium, Bulgaria, Cyprus, Czech Republic, Denmark, Estonia, Finland, France, Germany, Greece, Hungary, Iceland, Ireland, Italy, Latvia, Lithuania, Luxembourg, Malta, Netherlands, Norway, Poland, Portugal, Romania, Slovakia, Slovenia, Spain, Sweden, Switzerland and United Kingdom.

EUROPEAN COMMITTEE FOR STANDARDIZATION
COMITÉ EUROPÉEN DE NORMALISATION
EUROPÄISCHES KOMITEE FÜR NORMUNG

Management Centre: rue de Stassart, 36 B-1050 Brussels

© 2007 CEN All rights of exploitation in any form and by any means reserved worldwide for CEN national Members.

Ref. No. EN 15470:2007: E

European Committee for Standardization
Provided by IHS under license with CEN
No reproduction or networking permitted without license from IHS

Licensee=Sichuan Institute of Standardization 5988943
Not for Resale, 2015/2/2 20:00:32

Contents

Page

Foreword 3
1 Scope 4
2 Normative reference 4
3 Terms and definitions 4
4 Principle 4
5 Reagents 5
6 Apparatus 5
7 Test procedure 5
7.1 Safety 5
7.2 Summary of the method 5
7.3 Sampling procedure 6
7.4 Evaporation procedure 6
7.5 Gas Chromatography analysis of the evaporation residue 7
8 Calculations 8
9 Expression of results 8
10 Precision 9
10.1 General 9
10.2 Repeatability, *r* 9
10.3 Reproducibility, *R* 9
Annex A (normative) Equipment for the sampling line and evaporation device 10
A.1 Sampling set 10
A.2 Venting lines 10
Annex B (informative) Commercial equipment suitable for the method 12
B.1 General 12
B.2 Tube, stainless steel (type 304), ref 30203 12
B.3 Needle valve type SS-SS 2 12
B.4 Gas chromatograph Hewlett Packard 5890 12
B.5 Flasks A1036337 12
B.6 The GC column is a weakly polar capillary column, high temperature, type HT5, supplied by SGE 12
Annex C (informative) Examples of gas chromatograms 13
Bibliography 15

European Committee for Standardization
Provided by IHS under license with CEN
No reproduction or networking permitted without license from IHS

Licensee=Sichuan Institute of Standardization 5988943
Not for Resale, 2015/2/2 20:00:32

Foreword

This document (EN 15470:2007) has been prepared by Technical Committee CEN/TC 19 “Gaseous and liquid fuels, lubricants and related products of petroleum, synthetic and biological origin”, the secretariat of which is held by NEN.

This European Standard shall be given the status of a national standard, either by publication of an identical text or by endorsement, at the latest by May 2008, and conflicting national standards shall be withdrawn at the latest by May 2008.

Attention is drawn to the possibility that some of the elements of this document may be the subject of patent rights. CEN [and/or CENELEC] shall not be held responsible for identifying any or all such patent rights.

According to the CEN/CENELEC Internal Regulations, the national standards organizations of the following countries are bound to implement this European Standard: Austria, Belgium, Bulgaria, Cyprus, Czech Republic, Denmark, Estonia, Finland, France, Germany, Greece, Hungary, Iceland, Ireland, Italy, Latvia, Lithuania, Luxembourg, Malta, Netherlands, Norway, Poland, Portugal, Romania, Slovakia, Slovenia, Spain, Sweden, Switzerland and the United Kingdom.

European Committee for Standardization
Provided by IHS under license with CEN
No reproduction or networking permitted without license from IHS

Licensee=Sichuan Institute of Standardization 5988943
Not for Resale, 2015/2/2 20:00:32

1 Scope

This European Standard specifies a method for determining the dissolved residual matter in liquefied petroleum gases (LPG), in the range of 40 mg/kg to 100 mg/kg. Higher concentrations can be determined by adjusting the sample size.

The dissolved residue is the amount of organic compounds that are detectable by gas chromatography after evaporation of the sample at ambient temperature and then in an oven at 105 °C.

This method is not suitable for detecting solid materials or for possibly high molecular weight polymers (> 1 000 g/mol).

The advantages of this method are that a small quantity of LPG (50 g to 75 g) is required and the qualitative data available may indicate the origin of the residues (gas-oil, lubricants, plasticizers, etc.).

This method has been developed as a potential replacement of the commonly used method described in EN ISO 13757 [1], but is safer and more environmentally friendly. In addition, this new method is more accurate.

The precision data of the method have been determined from 20 mg/kg to 100 mg/kg. For a higher content of residue, the precision has not been tested, but remains of lesser interest as typical specifications are in the range of 20 mg/kg to 100 mg/kg.

NOTE An alternative European Standard, EN 15471 [2], specifies a gravimetric method, which has the same scope and slightly worst fidelity data.

WARNING — Use of this method involves hazardous materials and operations. It is the responsibility of the user to establish appropriate safety and health precautions. All handling must be performed in a fume hood.

2 Normative reference

The following referenced documents are indispensable for the application of this document. For dated references, only the edition cited applies. For undated references, the latest edition of the referenced document (including any amendments) applies.

EN ISO 4257, *Liquefied petroleum gases - Method of sampling (ISO 4257:2001)*

3 Terms and definitions

For the purposes of this document, the following term and definition applies.

3.1
liquefied petroleum gas (LPG)
petroleum gas that can be stored and/or handled in the liquid phase under moderate conditions of pressure and at ambient temperature, consisting predominantly of propane, butanes, with small proportions of propene, butenes and pentanes/pentenes

4 Principle

A known mass of LPG, between 50 g and 75 g, is sampled and evaporated in a standard small glass flask. The residue is heated in an oven at 105 °C for 1 h. It is then diluted with a solvent and one internal standard is added. The mixture is then analyzed by a capillary gas chromatography and quantified by the internal standard method.

European Committee for Standardization
Provided by IHS under license with CEN
No reproduction or networking permitted without license from IHS
Licensee=Sichuan Institute of Standardization 5988943
Not for Resale, 2015/2/2 20:00:32

5 Reagents

5.1 Isopropylalcohol (IPA), analytical grade.

5.2 Carbon dioxide, solid for cooling.

5.3 Carbon disulfide, analytical grade (99,9 % minimum).

5.4 Normal Octane, analytical grade (99,9 % minimum).

5.5 Pentane, analytical grade (99,5 % minimum).

6 Apparatus

6.1 Sample cylinder, of a total mass compatible with the balance used; preferably made of stainless steel fitted with two stainless steel valves free of oily materials, conforming to EN ISO 4257.

6.2 Cooling bath, comprised of a (0,5 to 2) dl Dewar flask, filled with an appropriate liquid, e.g. IPA cooled with solid carbon dioxide, to achieve a temperature of about – 60 °C.

6.3 Sampling set, according to Annex A.

6.4 Balance for weighting, maximum weight depending of the sample cylinder weight (for instance 16 kg or 30 kg), with an accuracy of 1 g or better.

6.5 Analytical balance, suitable, accurate to within 0,1 mg or better.

6.6 Vent line, according to Annex A.

6.7 Glass flasks, (100 ml to 150 ml) with screw open caps (for example as in B.5 or other).

6.8 Septum, adapted to the flask, PTFE/silicon (for example as in B.5 or other).

6.9 Laboratory gloves, of fine PVC, talc free.

6.10 Gas chromatograph, with its integrator and its automatic injector (see B.4 for an example).

6.11 Capillary column, (see B.6 for an example).

7 Test procedure

7.1 Safety

CAUTION — It is essential to work under an explosion-proof hood. In order to remove both the LPG and carbon disulfide vapours take all the necessary safety measures and, in particular, earth the equipment in order to eliminate the risks associated with static electricity.

7.2 Summary of the method

A small quantity of LPG (typically around 75 g) is transferred in liquid phase from the sample cylinder to a closed glass flask cooled in an IPA / CO_2 ice mixture. The transfer line shall not be cooled to reduce the possibility that a frozen substance is retained. The dual-phase mixture will condense when transferred in the cooled flask. The sampling flow is controlled by the needle valve inserted in the sampling line. The sample weight is determined by weighing the sample cylinder.

European Committee for Standardization
Provided by IHS under license with CEN
No reproduction or networking permitted without license from IHS

Licensee=Sichuan Institute of Standardization 5988943
Not for Resale, 2015/2/2 20:00:32

After transfer, the LPG is left to evaporate at ambient temperature. The glass container is then opened and placed for 1 h in an oven at 105 °C.

The resulting residue is dissolved in CS_2 and analyzed by gas chromatography using an internal standard.

7.3 Sampling procedure

a) Put the sample cylinder (6.1) on the balance (6.4);

b) Assemble the apparatus, using the set shown in Annex A and following Figure A.1, by connecting the liquid phase valve of the sample cylinder to the sampling line comprising:

   — PTFE line;

   — spindle-needle valve;

   — 1/16” stainless steel injection tubing.

c) Fix the PTFE line to a support in order that the sampling operations do not disturb the balance;

d) Prepare a cooling bath (6.2) by filling a beaker or small Dewar with solid carbon dioxide and IPA;

e) Clean a glass flask (6.7) with analytical pentane;

f) Prepare a cap and a septum (6.8) with two small holes permitting two passages for 1/16 inch tubings;

g) Place a clean glass flask (with its cap, its pierced PTFE septum and its venting line in position) in the cooling bath for at least 1 min before starting the sampling;

NOTE This enables a better introduction of the sample into the glass container.

h) Close the needle valve;

i) Open the sample cylinder cautiously and fill/purge the sampling line by opening the needle valve slightly and progressively;

j) Close the needle valve when the LPG flows regularly;

k) Introduce the injection end in the flask;

l) Record the weight of the sample cylinder, m_1;

m) Sample slowly the LPG by opening the needle valve;

n) When about 100 ml has been sampled, close the needle valve;

o) Record the weight of the sample cylinder, m_2;

p) The weight $\boldsymbol{m}$ of the LPG sample in grams is given by the calculation:

$$m = m_2 - m_1 \qquad (1)$$

q) Repeat the procedure for the required number of samples.

7.4 Evaporation procedure

Disconnect the sampling line and leave the vaporized gas to exit through the venting line.

NOTE The lower end of the venting line should not be placed in the boiling liquid phase.

European Committee for Standardization
Provided by IHS under license with CEN
No reproduction or networking permitted without license from IHS

Licensee=Sichuan Institute of Standardization 5988943
Not for Resale, 2015/2/2 20:00:32

The evaporation of the sample starts as soon as the sampling begins; the flask is left at ambient temperature or gently warmed by any appropriate device to a temperature not exceeding 25 °C.

The gas is vented through the hood.

When the natural evaporation is completed, the flask is left for the duration of 1 h at 105 °C, with the cap opened. The flask is then cooled down for 30 min in a desiccator and closed with its cap and septum. The test flask now contains the dissolved evaporation residue, the amount of which will be determined by gas chromatography in the second phase of the analysis.

CAUTION — Close the flask with the septum with the PTFE side downwards. Store the flask in the upright position.

7.5 Gas chromatography analysis of the evaporation residue

7.5.1 Summary of the method

The evaporation residue obtained in 7.4 is diluted and washed with a solution of CS_2 (solution A) containing an internal standard (octane). The solution is then injected onto the GC capillary column. The residue amount is determined by the internal standard method. The result should be corrected by a blank determination.

7.5.2 Preparation of the solution A

The solution A contains about 40 mg of octane weighted at 0,1 mg diluted in 100 g of CS_2.

7.5.3 Operating conditions

A recommended scheme of operating conditions is reported in Table 1:

Table 1

Carrier gas	nature	helium
	flow	4 ml/min
Injector	type	splitless
	temperature	380 °C
Injection	type	automatic
	volume	2 µl
Detector	type	FID
	temperature	400 °C
	hydrogen flow	30 ml/min
	air flow	350 ml/min
	make-up gas flow	30 ml/min
Signal	mode	compensation
Oven	initial temperature	10 °C during 1 min
	final temperature	400 °C
	rate	15 °C/min

European Committee for Standardization
Provided by IHS under license with CEN
No reproduction or networking permitted without license from IHS

Licensee=Sichuan Institute of Standardization 5988943
Not for Resale, 2015/2/2 20:00:32

7.5.4 Determination of the blank

First make a sufficient number of runs to purge the GC system.

Inject 2 µl of solution A onto the analytical column. Integer the portion of chromatogram eluted between N-C8 and the end of the analysis (see for an example Figure C.1).

The value of the area S_b calculated in this way shall not be more than 2 % of the area of the N-C8 peak. It will be subtracted from the area of test samples.

7.5.5 Sample analysis

Weigh the closed flask to the nearest 10 mg.

Introduce into the closed test glass flask containing the evaporation residue about 4 ml, weighed to the nearest 10 mg, of the solution A. Carefully and slowly wash the walls of the flask with the mixture. The resulting solution (*X*) in the closed flask is then used for GC injection.

If the GC analysis cannot be carried out immediately after evaporation in the oven, store the glass containers in the dark in a desiccator. Dilute the residue with solution A just before making the GC analysis.

Inject the solution *X* into the column using the same analytical conditions as for the blank determination.

The area (S_x) of the chromatogram is integrated between the N-C8 and the end of the analysis in the same conditions as for the blank determination (see Figure C.2).

8 Calculations

The amount of evaporation residues (*ER*), expressed in mg/kg is given by the following formula:

$$ER = \frac{(S_x - S_b) \text{ x } C_i \text{ x} 1000 M_s}{m \text{ x } S_i} \qquad (2)$$

where

S_x is the area of the chromatogram between the N-C8 and the end of the analysis;

S_b is the area recorded for the blank determination;

C_i is the concentration of internal standard (N-C8) in mg/g in the A solution;

M_s is the mass (g) of A solution used to dissolve the residue;

S_i is the area of the peak of the internal standard;

m is the mass (g) of LPG in the test sample.

9 Expression of results

Report the result to the nearest 1 mg/kg.

European Committee for Standardization
Provided by IHS under license with CEN
No reproduction or networking permitted without license from IHS

Licensee=Sichuan Institute of Standardization 5988943
Not for Resale, 2015/2/2 20:00:32

10 Precision

10.1 General

The precision of this method, established during inter-laboratories tests relating to LPG samples with oily residue contents between 20 mg/kg and 100 mg/kg, and determined on the basis of statistical examination of inter-laboratories test results [3], is as follows:

10.2 Repeatability, *r*

The difference between two test results obtained by the same operator with the same apparatus under constant operating conditions on nominally identical test material would, in the long run, in the normal and correct operation of the test method, exceed the value below in only one case in 20 (see Table 2 and Table 3).

10.3 Reproducibility, *R*

The difference between two single and independent results obtained by different operators working in different laboratories on nominally identical test material would, in the long run, in the normal and correct operation of the test method, exceed the value below in only one case in 20 (see Table 2 and Table 3).

Table 2 — Repeatability and reproducibility

r (mg/kg)	**R** (mg/kg)
$r = 0{,}054\ X + 3{,}51$ mg/kg	$R = 0{,}14\ X + 9{,}06$ mg/kg

where

X = mass of residue, in mg/kg

Table 3 — Calculated precision at different levels

Level (mg/kg)	**r** (mg/kg)	**R** (mg/kg)
20	5	12
50	6	16
75	8	20
100	9	23

European Committee for Standardization
Provided by IHS under license with CEN
No reproduction or networking permitted without license from IHS

Licensee=Sichuan Institute of Standardization 5988943
Not for Resale, 2015/2/2 20:00:32

Annex A
(normative)

Equipment for the sampling line and evaporation device

A.1 Sampling set

— OD 1/16", PTFE tubing or non-extractible polymer, about 1 m long (an example is given in B.2);

— Suitable connection from one end of this tube to the valve of the sample cylinder (for example Swagelock fitting welded to appropriate valve nut);

— Suitable connection from the other end of the line to the needle valve, connected to the injection tubing;

— Stainless steel spindle-needle valve with suitable fittings, permitting regulation of the flow (equipment of chromatographic quality) (for example B.3);

— OD 1/16” stainless steel tubing, about 15 cm in length, sharpened for passing through the septum of the flask.

A.2 Venting lines

OD 1/16” stainless steel tubing, about 15 cm in length, sharpened for passing through the septum of the flask and connected to a tube for venting toward the hood.

European Committee for Standardization
Provided by IHS under license with CEN
No reproduction or networking permitted without license from IHS

Licensee=Sichuan Institute of Standardization 5988943
Not for Resale, 2015/2/2 20:00:32

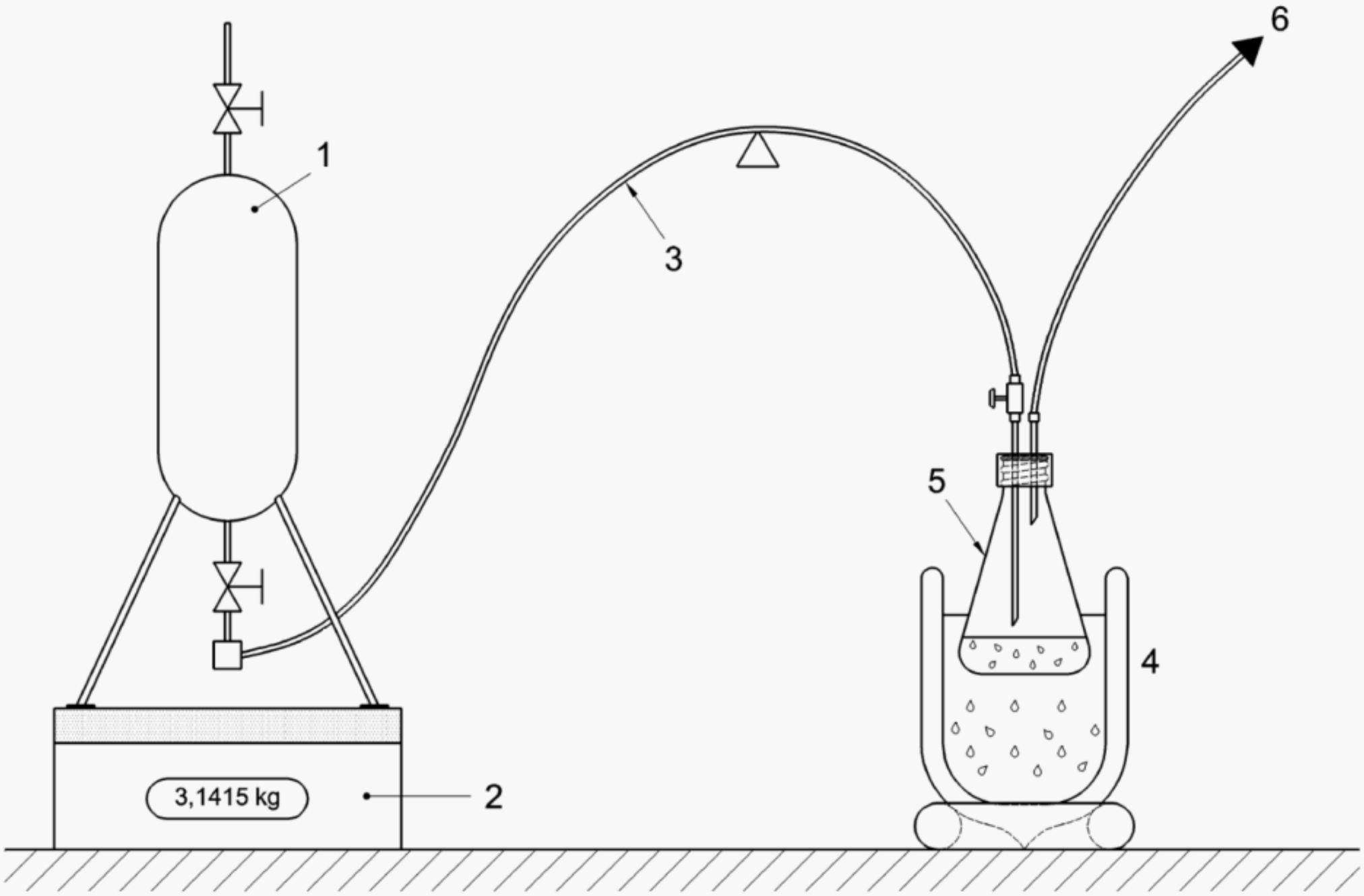

Key

1 sample cylinder

2 balance

3 flexible line

4 cooling bath (Dewar or beaker)

5 evaporation flask

6 vent line

Figure A.1 — Equipment for LPG sampling

European Committee for Standardization
Provided by IHS under license with CEN
No reproduction or networking permitted without license from IHS

Licensee=Sichuan Institute of Standardization 5988943
Not for Resale, 2015/2/2 20:00:32

Annex B
(informative)

Commercial equipment suitable for the method

B.1 General

The information in this Annex is given as an indication of suitable equipment needed to carry out the procedure. It does not imply a recommendation by CEN or that they have been tested in international Round Robin tests.

B.2 Tube, stainless steel (type 304), ref 30203

Altech Europe, Begoniastraat 6, B-9731, Nazareth (Eke), Belgium

B.3 Needle valve type SS-SS 2

Whitey CO., 15635 Saranac Road, Cleveland, OH 44110 (USA)

B.4 Gas chromatograph Hewlett Packard 5890

Chemstation for GC driving and data acquisition, automatic injector

B.5 Flasks A1036337

Fisher Scientific Labosi, 12 Avenue Gay Lussac
Zac Clé de Saint Pierre – BP 2
78996 Elancourt cedex

B.6 GC column

A weakly polar capillary column, high temperature, type HT5, supplied by SGE (inside diameter: 0,53mm, film: 0.15µm, length 10m). Phase: phenyl polycarborane siloxane at 5 %.

SGE France, 12 Avenue du Quebec BP 98 Villebon
91943 Courtabœuf Cedex
Tel: 33 (0) 1 69 29 80 90
Fax: 33 (0) 1 69 29 09 25

European Committee for Standardization
Provided by IHS under license with CEN
No reproduction or networking permitted without license from IHS

Licensee=Sichuan Institute of Standardization 5988943
Not for Resale, 2015/2/2 20:00:32

Annex C
(informative)

Examples of gas chromatograms

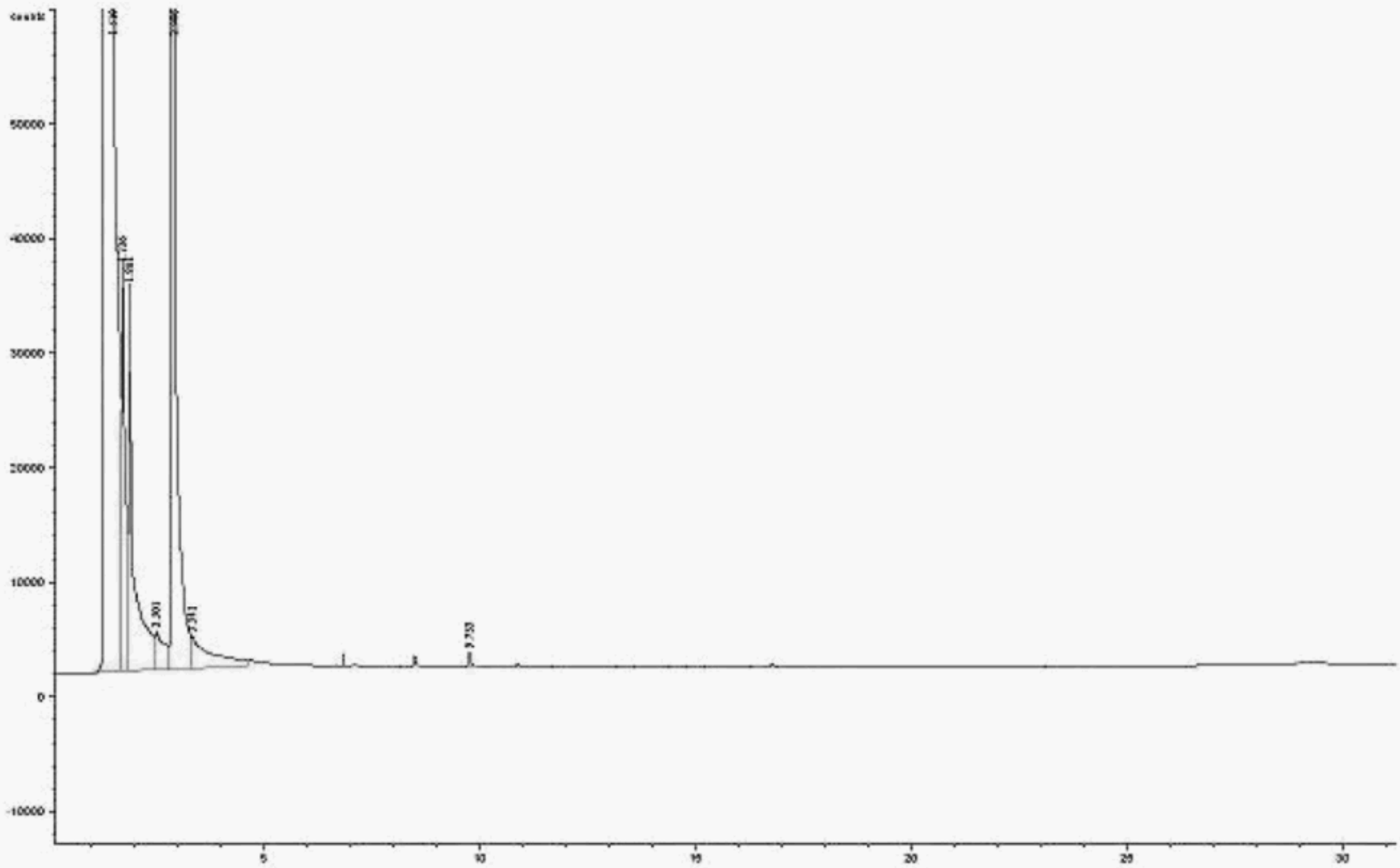

Figure C.1 — Example of blank determination

European Committee for Standardization
Provided by IHS under license with CEN
No reproduction or networking permitted without license from IHS

Licensee=Sichuan Institute of Standardization 5988943
Not for Resale, 2015/2/2 20:00:32

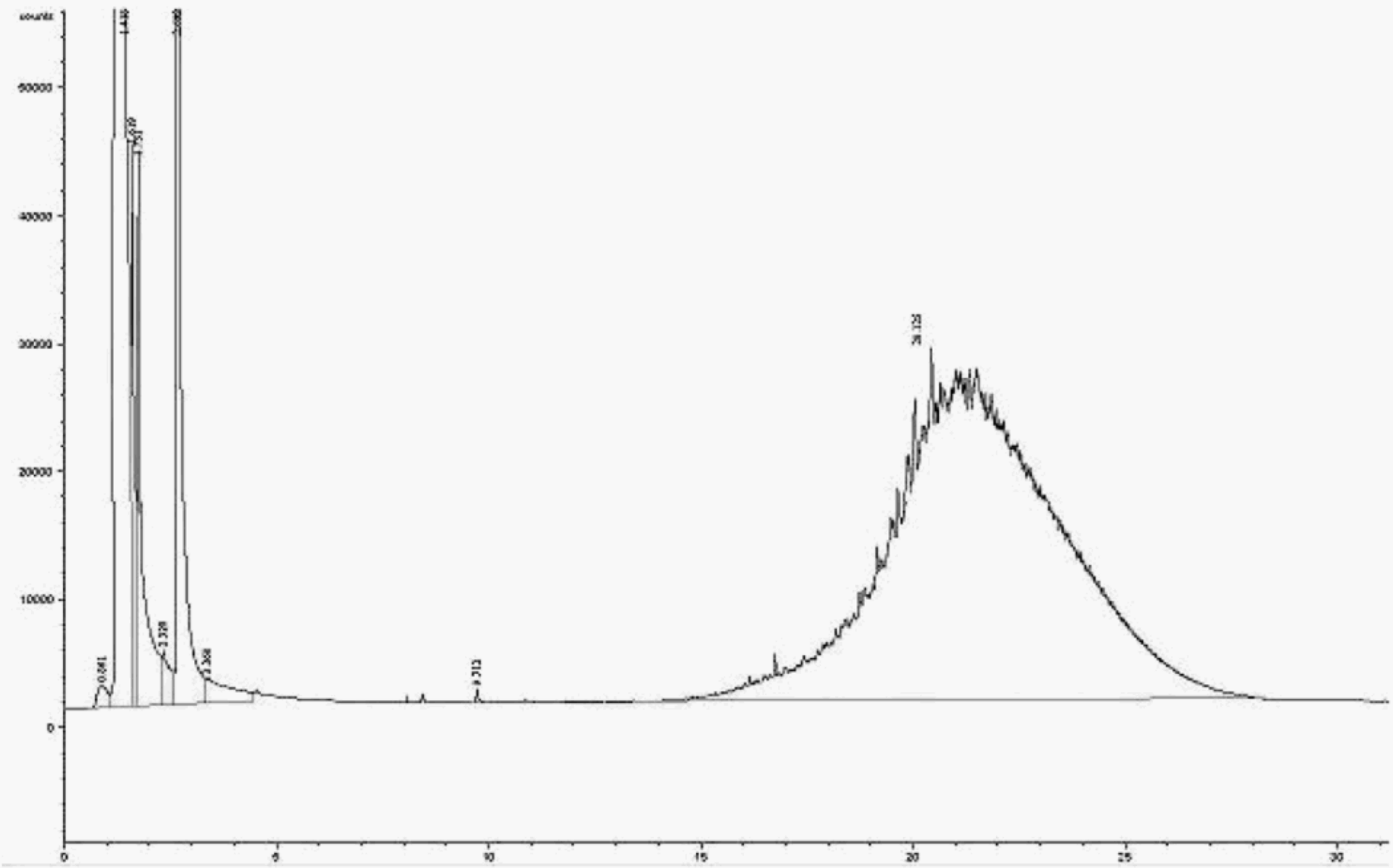

Figure C.2 — Example of a residue determination

European Committee for Standardization
Provided by IHS under license with CEN
No reproduction or networking permitted without license from IHS

Licensee=Sichuan Institute of Standardization 5988943
Not for Resale, 2015/2/2 20:00:32

Bibliography

[1] EN ISO 13757:1996, *Liquefied petroleum gases — Determination of oily residues — High-temperature method (ISO 13757:1996)*

[2] EN 15471, *Liquefied petroleum gases — Determination of dissolved residues — High-temperature gravimetric method*

[3] EN ISO 4259, *Petroleum products — Determination and application of precision data in relation to methods of test (ISO 4259:2006)*

European Committee for Standardization
Provided by IHS under license with CEN
No reproduction or networking permitted without license from IHS

Licensee=Sichuan Institute of Standardization 5988943
Not for Resale, 2015/2/2 20:00:32

BSI — British Standards Institution

BSI is the independent national body responsible for preparing British Standards. It presents the UK view on standards in Europe and at the international level. It is incorporated by Royal Charter.

Revisions

British Standards are updated by amendment or revision. Users of British Standards should make sure that they possess the latest amendments or editions.

It is the constant aim of BSI to improve the quality of our products and services. We would be grateful if anyone finding an inaccuracy or ambiguity while using this British Standard would inform the Secretary of the technical committee responsible, the identity of which can be found on the inside front cover. Tel: +44 (0)20 8996 9000. Fax: +44 (0)20 8996 7400.

BSI offers members an individual updating service called PLUS which ensures that subscribers automatically receive the latest editions of standards.

Buying standards

Orders for all BSI, international and foreign standards publications should be addressed to Customer Services. Tel: +44 (0)20 8996 9001. Fax: +44 (0)20 8996 7001. Email: orders@bsi-global.com. Standards are also available from the BSI website at http://www.bsi-global.com.

In response to orders for international standards, it is BSI policy to supply the BSI implementation of those that have been published as British Standards, unless otherwise requested.

Information on standards

BSI provides a wide range of information on national, European and international standards through its Library and its Technical Help to Exporters Service. Various BSI electronic information services are also available which give details on all its products and services. Contact the Information Centre. Tel: +44 (0)20 8996 7111. Fax: +44 (0)20 8996 7048. Email: info@bsi-global.com.

Subscribing members of BSI are kept up to date with standards developments and receive substantial discounts on the purchase price of standards. For details of these and other benefits contact Membership Administration. Tel: +44 (0)20 8996 7002. Fax: +44 (0)20 8996 7001. Email: membership@bsi-global.com.

Information regarding online access to British Standards via British Standards Online can be found at http://www.bsi-global.com/bsonline.

Further information about BSI is available on the BSI website at http://www.bsi-global.com.

Copyright

Copyright subsists in all BSI publications. BSI also holds the copyright, in the UK, of the publications of the international standardization bodies. Except as permitted under the Copyright, Designs and Patents Act 1988 no extract may be reproduced, stored in a retrieval system or transmitted in any form or by any means – electronic, photocopying, recording or otherwise – without prior written permission from BSI.

This does not preclude the free use, in the course of implementing the standard, of necessary details such as symbols, and size, type or grade designations. If these details are to be used for any other purpose than implementation then the prior written permission of BSI must be obtained.

Details and advice can be obtained from the Copyright & Licensing Manager. Tel: +44 (0)20 8996 7070. Fax: +44 (0)20 8996 7553. Email: copyright@bsi-global.com.

BSI
389 Chiswick High Road
London
W4 4AL

European Committee for Standardization
Provided by IHS under license with CEN
No reproduction or networking permitted without license from IHS

Licensee=Sichuan Institute of Standardization 5988943
Not for Resale, 2015/2/2 20:00:32