EUROPEAN STANDARD

NORME EUROPÉENNE

EUROPÄISCHE NORM

EN 14808

December 2005

ICS 97.220.10

English Version

Surfaces for sports areas - Determination of shock absorption

Surfaces de sols sportifs - Détermination de l'absorption des chocs

Sportböden - Bestimmung des Kraftabbaus

This European Standard was approved by CEN on 28 November 2005.

CEN members are bound to comply with the CEN/CENELEC Internal Regulations which stipulate the conditions for giving this European Standard the status of a national standard without any alteration. Up-to-date lists and bibliographical references concerning such national standards may be obtained on application to the Central Secretariat or to any CEN member.

This European Standard exists in three official versions (English, French, German). A version in any other language made by translation under the responsibility of a CEN member into its own language and notified to the Central Secretariat has the same status as the official versions.

CEN members are the national standards bodies of Austria, Belgium, Cyprus, Czech Republic, Denmark, Estonia, Finland, France, Germany, Greece, Hungary, Iceland, Ireland, Italy, Latvia, Lithuania, Luxembourg, Malta, Netherlands, Norway, Poland, Portugal, Slovakia, Slovenia, Spain, Sweden, Switzerland and United Kingdom.

EUROPEAN COMMITTEE FOR STANDARDIZATION
COMITÉ EUROPÉEN DE NORMALISATION
EUROPÄISCHES KOMITEE FÜR NORMUNG

Management Centre: rue de Stassart, 36 B-1050 Brussels

© 2005 CEN All rights of exploitation in any form and by any means reserved worldwide for CEN national Members.

Contents

Page

Foreword 3
1 Scope 4
2 Normative references 4
3 Terms and definitions 4
4 Principle 4
5 Test piece 5
6 Conditioning and test temperature 5
7 Apparatus 5
8 Measurement of reference force, F_r 6
9 Procedure 6
10 Expression of results 6
11 Test report 8

Foreword

This European Standard (EN 14808:2005) has been prepared by Technical Committee CEN/TC 217 “Surfaces for sports areas”, the secretariat of which is held by BSI.

This European Standard shall be given the status of a national standard, either by publication of an identical text or by endorsement, at the latest by June 2006, and conflicting national standards shall be withdrawn at the latest by June 2006.

According to the CEN/CENELEC Internal Regulations, the national standards organizations of the following countries are bound to implement this European Standard: Austria, Belgium, Cyprus, Czech Republic, Denmark, Estonia, Finland, France, Germany, Greece, Hungary, Iceland, Ireland, Italy, Latvia, Lithuania, Luxembourg, Malta, Netherlands, Norway, Poland, Portugal, Slovakia, Slovenia, Spain, Sweden, Switzerland and United Kingdom.

1 Scope

This European Standard specifies a method for the determination of shock absorption characteristics of sports surfaces.

NOTE The method specified is commonly known as the Artificial Athlete (Berlin) method.

2 Normative references

The following referenced documents are indispensable for the application of this European Standard. For dated references, only the edition cited applies. For undated references, the latest edition of the referenced document (including any amendments) applies.

EN 12229, *Surfaces for sports areas — Procedure for the preparation of synthetic turf and textile test pieces*

ISO 6487, *Road vehicles — Measurement techniques in impact tests — Instrumentation*

3 Terms and definitions

For the purposes of this European Standard, the following terms and definitions apply.

3.1
area-elastic sports surface
sports surface, to which the application of a point force causes deflection over a relatively large area around the point of application of the force

3.2
point-elastic sports surface
sports surface, to which the application of a point force causes deflection only at or close to the point of application of the force

3.3
combination-elastic sports surface
area-elastic sports surface with a point-elastic top layer, to which the application of a point force causes both localized deflection and deflection over a wider area

3.4
mixed-elastic sports surface
point-elastic sports surface with an area-stiffening component

NOTE A mixed-elastic sports surface has deflection characteristics between those of an area-elastic surface and a point-elastic surface.

3.5
shock absorption
ability of a sports surface to reduce the impact force of a body falling onto the surface

NOTE Shock absorption is a physical quantity consisting of damping and resilience due to a certain impact.

4 Principle

A weight is allowed to fall onto a spring placed on the test piece and the maximum force applied is recorded. The difference between this force and the maximum force measured on a hard surface is reported as the force reduction.

5 Test piece

For area-elastic and combined-elastic sports surfaces, the test piece shall be a sample of the complete surfacing system measuring 3,5 m by 3,5 m, assembled and installed in accordance with the manufacturer's stated method, on a substrate complying with the manufacturer's requirements.

For point-elastic and mixed-elastic sports surfaces, the test piece shall be a piece of the surface of minimum size 1,0 m by 1,0 m, in combination with the supporting layers to be used in service and using the recommended method of attachment in accordance with the manufacturer's instructions.

Laboratory test pieces of either synthetic turf or textile materials shall be prepared in accordance with EN 12229.

6 Conditioning and test temperature

For tests in the laboratory, condition the test piece for a minimum of 40 h at a temperature of (23 ± 2) °C.

Tests on site shall be carried out at the prevailing ambient temperature and humidity, which shall be recorded and reported.

7 Apparatus

7.1.1 The principle of the apparatus is shown in Figure 1 and consists of the components specified in 7.1.2 to 7.1.10.

7.1.2 Falling weight having a mass of (20 ± 0,1) kg with a hardened striking surface guided so that it is allowed to fall smoothly and vertically with minimum friction.

7.1.3 Spiral spring, having a diameter of (69 ± 1) mm, whose characteristic, when mounted in the assembly described below, is linear with a spring rate of (2 000 ± 60) N/mm over the range 0,1 kN to 7,5 kN with a hardened upper plate. The spring should have three or more coaxial coils which shall be rigidly fixed together at their ends. This may be achieved, for instance, by milling the spring from a single piece of steel.

7.1.4 Adjustable supporting feet, at least 250 mm from the point of application of the load for a point elastic sports surface and at least 600 mm from the point of application of the load for an area elastic sports surface.

7.1.5 Steel base plate, having a lower side rounded to a radius of 500 mm; an edge radius of 1 mm, a diameter (70,0 ± 0,1) mm and a minimum thickness of 10 mm.

7.1.6 Metal guiding tube having an internal diameter of (71,0 ± 0,1) mm.

7.1.7 Testing foot, consisting of the steel base plate, force sensing device, spring and the upper plate (minimum thickness 20 mm, measured at the centre of the plate) together, guided in the guiding tube. The total mass of the testing foot (without guiding tube) shall be (3,0 ± 0,3) kg.

7.1.8 Means of supporting the weight, allowing it to be set to the drop height with an uncertainty no greater than ± 0,25 mm.

7.1.9 Means of conditioning and recording the signal from the force sensing device and the sensors and a means of displaying the record.

The channel frequency class of the conditioning amplifier, in accordance with ISO 6487, shall be ≥ 1 kHz.

The conditioning amplifier shall be followed by or shall incorporate a low-pass filter having a 2nd order Butterworth characteristic with a -3 dB frequency of 120 Hz. Filtration may be implemented in hardware or software. The response of the system at any given frequency shall be within ± 0,5 dB of the expected response, calculated on the basis of the Butterworth function.

The system should be able to record the peak value of single force-pulse signals of 10 ms duration with an uncertainty of no greater than ± 2 %.

If digital recording techniques are used, the word length shall be ≥ 12 bits, the amplitude of the signal shall be no less than 25 % of the equipment full scale and the sampling frequency shall be ≥ 2 kHz or twice the upper frequency response limit of the amplifier/filter system preceding the digital system, whichever is the greater.

7.1.10 A rigid non-vibrating smooth and even concrete floor, which achieves a value of F_r in accordance with 8.4.

8 Measurement of reference force, F_r

8.1 Set up the apparatus so that it is vertically positioned on the concrete floor.

8.2 Set the height of the lower face of the impact weight (projection) so that it is (55 ± 0,25) mm above the force-measuring assembly. Allow the weight to fall onto the force measuring assembly. Record the peak force applied to the surface in the course of the impact.

8.3 Repeat the procedure described in 8.2 ten times, giving a total of eleven impacts. Record the mean value of the peak force from the second to the eleventh impact and denote it as F_r.

8.4 The value of F_r shall lie in the range (6,60 ± 0,25) kN. If the value lies outside this range, the results shall be considered invalid.

8.5 Carry out this procedure at intervals no greater than three months.

9 Procedure

9.1 Set up the apparatus so that it is vertically positioned on the test piece such that the weight falls at least 20 cm from the edge, for point-elastic and mixed-elastic sports surfaces, or at least 1 m from the edge, for area-elastic and combination-elastic sports surfaces.

9.2 Set the height of the lower face of the impact weight (projection) so that it is (55 ± 0,25) mm above the force-measuring assembly. Allow the weight to fall onto the force-measuring assembly.

9.3 Record the peak force applied to the surface in the course of the impact. Within 5 s of the impact, lift and re-attach the impact weight to its support mechanism so that the surface can recover before the following impact.

9.4 Unless otherwise specified, repeat the procedure in 9.2 twice at intervals of (60 ± 10) s giving a total of three impacts. Record the mean value of the peak force from the second and third impacts and denote it as F_t.

9.5 If further tests are to be carried out on the same sample, each shall be carried out at a new location, no test position being less than 100 mm from any other.

10 Expression of results

10.1 Calculate the force reduction, R, from the following expression.

$$R = \left(1 - \frac{F_t}{F_r}\right) \times 100$$

where

R is the force reduction, expressed as a percentage (%);

F_t is the measured maximum peak force for the test piece, expressed in Newtons (N);

F_r is the measured maximum peak force for the concrete, expressed in Newtons (N).

10.2 Calculate the force reduction, R, of a single testing spot as the mean of the force reduction results of the second and third impacts and report the result to the nearest whole percentage number, e.g. 37 %.

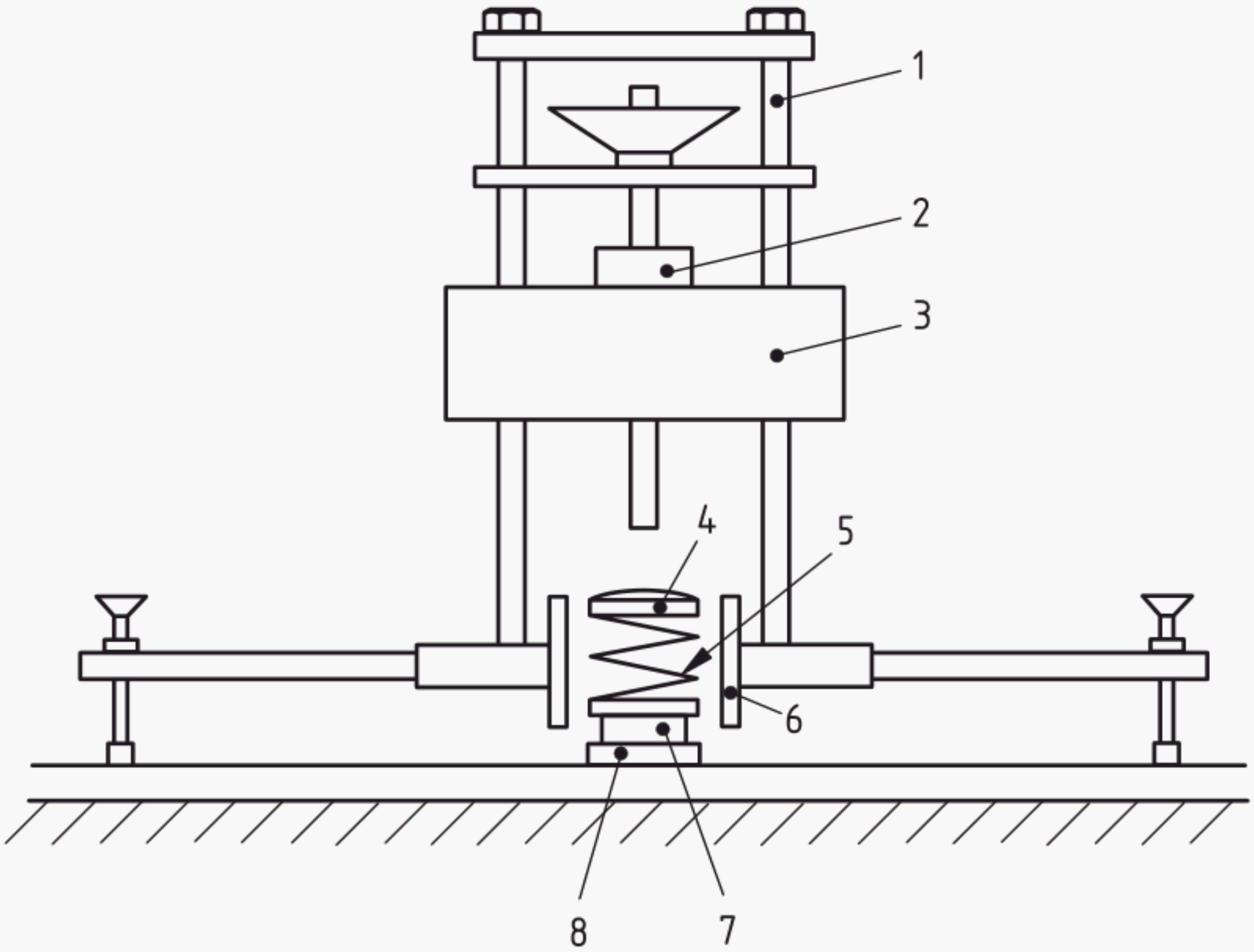

Key

1 guide for the falling weight
2 electromagnet
3 falling weight
4 upper plate
5 spring
6 guiding tube
7 force sensing device
8 base plate

Figure 1 — Artificial athlete apparatus

11 Test report

The test report shall include the following information.

a) reference to this European Standard, i.e. EN 14808:2005;

b) complete identification of the surface tested, a statement of the manufacturer's reference, the type of supporting layers and method of attachment and the dimensions of the test piece;

c) ambient temperature and relative humidity;

d) force reduction, R;

e) value of F_r and the date on which it was determined;

f) condition of the surface at the time of test, i.e. wet or dry;

g) statement of the uncertainty on the result reported.