EUROPEAN STANDARD

NORME EUROPÉENNE

EUROPÄISCHE NORM

EN 14749

August 2005

ICS 97.040.10; 97.140

Supersedes EN 1153:1995, EN 1727:1998

English Version

Domestic and kitchen storage units and worktops - Safety requirements and test methods

Meubles d'habitation et de cuisine - Élements de rangement et plans de travail - Exigences de sécurité et méthodes d'essai

Wohn- und Küchenmöbel - Schränke, Regale und Arbeitsplatten - Sicherheitstechnische Anforderungen und Prüfverfahren

This European Standard was approved by CEN on 8 July 2005.

CEN members are bound to comply with the CEN/CENELEC Internal Regulations which stipulate the conditions for giving this European Standard the status of a national standard without any alteration. Up-to-date lists and bibliographical references concerning such national standards may be obtained on application to the Central Secretariat or to any CEN member.

This European Standard exists in three official versions (English, French, German). A version in any other language made by translation under the responsibility of a CEN member into its own language and notified to the Central Secretariat has the same status as the official versions.

CEN members are the national standards bodies of Austria, Belgium, Cyprus, Czech Republic, Denmark, Estonia, Finland, France, Germany, Greece, Hungary, Iceland, Ireland, Italy, Latvia, Lithuania, Luxembourg, Malta, Netherlands, Norway, Poland, Portugal, Slovakia, Slovenia, Spain, Sweden, Switzerland and United Kingdom.

EUROPEAN COMMITTEE FOR STANDARDIZATION
COMITÉ EUROPÉEN DE NORMALISATION
EUROPÄISCHES KOMITEE FÜR NORMUNG

Management Centre: rue de Stassart, 36 B-1050 Brussels

© 2005 CEN All rights of exploitation in any form and by any means reserved worldwide for CEN national Members.

Ref. No. EN 14749:2005: E

Contents

page

Foreword 3
Introduction 4
1 Scope 5
2 Normative references 5
3 Terms and definitions 5
4 General test conditions 6
4.1 Preliminary preparation 6
4.2 Test equipment 6
4.3 Tolerances 6
4.4 Sequence of testing 7
4.5 Prevention of movement during test 7
4.6 Loading 7
5 Test apparatus 7
5.1 Floor surface 7
5.2 Wall surface 7
5.3 Stops 7
5.4 Loading pad 7
5.5 Apparatus for slam shut/open of extension elements 7
5.6 Masses 7
5.7 Glass marbles 7
5.8 Steel impact plate 8
5.9 Loads for filing pockets 8
6 Safety requirements and test methods 8
6.1 General safety requirements 8
6.2 Principles of safety requirements 8
6.3 Specific safety requirements and test methods 10
6.4 Wall and top hanging units 14
6.5 Impact test for vertical glass components 15
6.6 Stability 15
7 Test report 18
ANNEX A (normative) Apparatus for slam-open test of extension elements 19
A.1 Principle 19
A.2 Apparatus 19
A.3 Calibration 19
A.4 Method 21
ANNEX B (informative) Example of loading of wall hanging units (see 6.4.3 overload) 22
ANNEX C (informative) Relation between safety requirements, total mass and position of centre of gravity 23
Bibliography 24

Foreword

This European Standard (EN 14749:2005) has been prepared by Technical Committee CEN/TC 207 “Furniture”, the secretariat of which is held by UNI.

This European Standard shall be given the status of a national standard, either by publication of an identical text or by endorsement, at the latest by February 2006, and conflicting national standards shall be withdrawn at the latest by February 2006.

This European Standard supersedes EN 1153:1995 and EN 1727:1998.

According to the CEN/CENELEC Internal Regulations, the national standards organizations of the following countries are bound to implement this European Standard: Austria, Belgium, Cyprus, Czech Republic, Denmark, Estonia, Finland, France, Germany, Greece, Hungary, Iceland, Ireland, Italy, Latvia, Lithuania, Luxembourg, Malta, Netherlands, Norway, Poland, Portugal, Slovakia, Slovenia, Spain, Sweden, Switzerland and United Kingdom.

Introduction

This European Standard is a merger of the previous EN 1727, “Domestic furniture — Storage furniture — Safety requirements and test methods”, and EN 1153, “Kitchen furniture — Safety requirements and test methods for built-in and free standing kitchen cabinets and worktops”.

It has been prepared in order to provide assurance that kitchen cabinets and worktops and domestic storage furniture complying with the requirements are reasonably safe.

It should be noted that the assessment of ageing and degradation of materials and the effects caused by heating from appliances are not included, nor is fire safety.

It is the intention of this European Standard to prevent serious injury through normal use, as well as foreseeable misuse. It cannot ensure that structural failure will not eventually occur as a result of habitual misuse.

The co-ordinating sizes for kitchen furniture (including worktops) kitchen appliances, sinks and decorative panels are covered by EN 1116, “Kitchen furniture — Co-ordinating sizes for kitchen furniture and kitchen appliances”.

1 Scope

This European Standard specifies safety requirements and test methods for the structure of all types of kitchen and bathroom storage units and domestic storage furniture that are fully assembled and ready for use, including kitchen and bathroom worktops and movable and non-movable parts and parts made of glass.

This European Standard applies to the storage function only. If the furniture has additional functions, it is essential that it also meets the requirements of the appropriate European safety standard for that function.

It does not apply to units covered by EN 71-1:1998/A7:2002 nor to catering equipment.

Safety depending on the structure of the building is not included, e.g. the strength of wall hanging cabinets includes only the cabinet and its parts. The wall and the wall attachments are not included.

The stability tests for storage furniture (6.6) include an allowance for sloping or uneven floors and the effect of soft carpets.

2 Normative references

The following referenced documents are indispensable for the application of this European Standard. For dated references, only the edition cited applies. For undated references, the latest edition of the referenced document (including any amendments) applies.

EN 12150-1:2000, *Glass in building — Thermally toughened soda lime silicate safety glass — Part 1: Definition and description*

EN 12600, *Glass in building — Pendulum test — Impact test method and classification for flat glass*

EN 14072:2003, *Glass in furniture — Test methods*

ISO 7619-2, *Rubber, vulcanized or thermoplastic - Determination of indentation hardness -- Part 2: IRHD pocket meter method*

3 Terms and definitions

For the purposes of this European Standard, the following terms and definitions apply.

3.1
free standing unit
unit not intended to be attached to a load bearing structure

3.2
built-in unit
unit intended to be attached to the structure of the building, directly or via other units

3.3
wall-hanging unit
unit intended to be entirely supported by a vertical structure, e.g. wall, panel or screen

3.4
storage area/- volume
spaces in furniture for storage, e.g. in extension elements and on shelves, bottoms and tops

3.5
extension element
component that can be pulled out and pushed in, e.g. baskets, drawers or suspended pocket files

3.6
locking mechanism
mechanism that limits access to the interior of a unit or a storage element. It requires a key or a combination in order to activate it or to make it possible to activate it

4 General test conditions

4.1 Preliminary preparation

The unit/component shall be tested as delivered. At least one week in normal indoor conditions shall have elapsed between manufacturing (or assembly) and testing.

The unit/component shall be assembled and/or configured according to the instructions supplied with it. The most adverse configuration shall be used for each test. For testing a range of related models, only worst case(s) need to be tested. If mounting or assembly instructions are not supplied, the mounting or assembly method shall be recorded in the test report. Fittings shall be tightened before testing and shall not be re-tightened unless specifically required by the manufacturer. If the configuration must be changed to produce the worst-case conditions, the need to re-tighten the fittings shall be recorded in the test report.

Combination of tests may be necessary to cover the properties of multifunction components; e.g. a receding door shall be tested as a sliding door and as a pivoted door.

The tests shall be carried out in indoor ambient conditions at a temperature between 15 °C and 25 °C. If during a test the temperature is outside of the range of 15 °C to 25 °C, the maximum and/or minimum temperature shall be recorded in the test report.

4.2 Test equipment

All tests specified for a particular component shall be carried out on the same sample.

Unless otherwise specified, the tests may be applied by any suitable device, because results are not dependent upon the apparatus.

The equipment shall be capable of following the deformation of the unit/component during testing, so that the loads are always applied at the specified points and in the specified directions.

The loading pad shall be capable of pivoting in relation to the direction of the applied force. The pivot point shall be as close as practically possible to the loading surface.

The forces in the static load tests shall be applied sufficiently slowly to ensure that negligible dynamic force is applied.

The forces may be replaced by masses. The relationship of 10 N = 1 kg shall be used.

4.3 Tolerances

Unless otherwise stated, the following tolerances are applicable:

Forces: ± 5% of the nominal force;

Velocities: ± 5% of the nominal velocity;

Masses: ± 1% of the nominal mass;

Dimensions: ± 1 mm of the nominal dimension;

Angles: ± 2° of the nominal angle.

The accuracy for the positioning of loading pads shall be ± 5 mm.

4.4 Sequence of testing

The tests shall be carried out in the same sequence as the clauses are numbered in this European Standard.

4.5 Prevention of movement during test

If a free-standing unit tends to overbalance during the tests in 6.3, load the unit until this tendency stops.

If a free-standing unit tends to slide during the tests according to 6.3, 6.5 and 6.6, the unit shall be restrained by stops (5.3).

4.6 Loading

During all tests, all components intended for storage purposes shall be uniformly loaded according to Table 1, except where otherwise specified.

5 Test apparatus

5.1 Floor surface

A rigid, horizontal and flat surface.

For the stability tests (6.6): a rigid and flat surface with a slope of (10 ± 0,5) mm/m.

5.2 Wall surface

A rigid, vertical and flat surface.

5.3 Stops

To prevent the article from sliding but not tilting the stops shall be not higher than 12 mm except in cases where the design of the unit necessitates the use of higher stops, in which case the lowest height that will prevent the item from moving shall be used.

5.4 Loading pad

A rigid object with a flat surface, 100 mm in diameter (or 50 mm to be used in limited space), with a 12 mm front edge radius.

5.5 Apparatus for slam shut/open of extension elements

Apparatus as well as calibration instructions are given in Annex A.

5.6 Masses

Masses shall be designed so that they do not reinforce the structure or re-distribute the stresses.

5.7 Glass marbles

Marbles, made of solid glass, shall be between 10 mm and 15 mm in diameter. They shall be in a flexible bag large enough to allow them to move in the bag during the test.

5.8 Steel impact plate

A 1,7 kg steel impact plate 200 mm × 109 mm × 10 mm faced with a 3 mm thick layer of rubber with a hardness of (85 ± 10) IRHD according to ISO 7619-2.

5.9 Loads for filing pockets

Suspended filing pockets shall be loaded with paper or an equivalent alternative.

6 Safety requirements and test methods

6.1 General safety requirements

Components or parts with which the user may come into contact during normal use shall have no burrs and/or sharp edges, nor shall there be any open-ended tubes.

All movable parts accessible during normal use shall have safety distances in any position during movement of ≤ 8 mm or ≥ 25 mm. This applies to any elements moving relatively to each other, with the exception of doors, flaps and extension elements including their hardware. The safety distances also apply to the distance between handles/handgrips and other parts.

In order to avoid pinching points for feet, the safety height for vertically moving units shall be at least 100 mm from the floor.

All extension elements whose total mass (according to 6.2.3) exceeds 10 kg but where safety tests are not required (see 6.2) shall have effective open stops, i.e. they shall resist being pulled out of the unit once by a horizontal force of 200 applied to the handle of the loaded extension element, or they shall be supplied with product information to this effect.

Any external, vertical glass component ≥ 0,1 m² in area, where the smallest dimension is greater than or equal to 200 mm and any part of which is less than 900 mm above the floor, shall not break when tested according to EN 14072, or shall break as specified in EN 14072:2003, Clause 7, C.2 or C.3.

In order to prevent children's heads and necks from being entrapped by lids of storage units, all storage units or storage areas within storage furniture, which are closed by a horizontal lid that is 1 000 mm or less from the floor and weighs 0,25 kg or more shall be fitted with a means of preventing closure under a force less than 8 N, e.g. a self locking stay or a friction stay. In the case of friction stays, product information shall be given for the correct adjustment of the closing friction.

No unloaded shelf shall tip when a downwards vertical force of 100 N is applied to any point 25 mm in from the front edge.

All roll fronts and doors sliding vertically including those constructed from hinged elements shall not move by themselves from any position higher than 200 mm measured from the closed position if this can cause any injury.

6.2 Principles of safety requirements

6.2.1 General

The following safety requirements are based upon the knowledge that kitchen units and domestic storage furniture and their components are likely to cause serious injury only when they are heavy and fall through a significant distance.

Therefore, with the exception of vertical glass components (6.5) and stability (6.6), the test methods and requirements specified in 6.3 are only applicable to loaded units and components whose centre of gravity is:

— at or above 900 mm from the floor and whose total mass (according to 6.2.3) equals or exceeds 10 kg; or

— at or above 350 mm and whose total mass (according to 6.2.3) equals or exceeds 35 kg.

The requirements and test methods for the stability (6.6) apply only to storage units, where the height to the top of the unit exceeds 600 mm, and when the multiplication of the height of the centre of gravity in m (6.2.2) and the total mass in kg (6.2.3) exceeds the value 6.

6.2.2 Determination of centre of gravity

The centre of gravity of a component or unit shall be taken as the geometric centre of that unit, except in the case of extension elements, where the geometric centre of the usable volume shall be used.

The height of the centre of gravity above the floor shall be measured for cupboards or their components when installed according to the manufacturer's instructions. Adjustable feet shall be set at their middle position.

Height adjustable components shall be placed in their highest position.

All wall or top hanging units or components thereof are considered to have their centre of gravity more than 900 mm above the floor.

6.2.3 Determination of total mass

The total mass is the mass of the component or unit plus the mass supported by it.

Unless conspicuously and durably marked by the manufacturer with a maximum load, the mass of the contents shall be determined according to Table 1, which specifies load per unit area for shelves and the load per unit volume for extension elements and baskets.

The volume of fixed baskets shall be taken as the volume contained below its top edge.

The volume of extension elements shall be taken as the area of its bottom multiplied by the clear height. The clear height is the distance between the top of the extension element bottom and the lower edge of the extension element above, or the structure of the unit (see Figure 1).

Table 1 — Loads

Component	Load
All horizontal storage areas, including shelves, bottoms, tops and flaps	0,65 kg/dm^2
Extension elements and fixed baskets	0,2 kg/dm^3
Clothes rails	4 kg/dm
Suspended filing pockets	2,5 kg/dm[a]

[a] Measured perpendicular to the plane of the filing pockets.

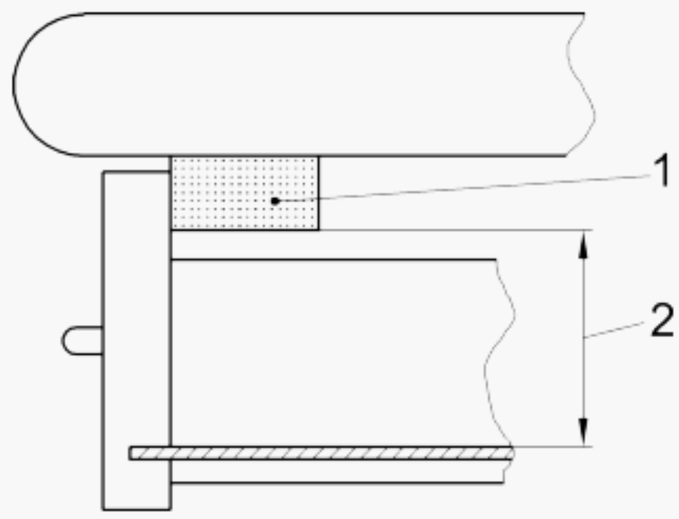

Key
1 Structure of the unit
2 Clear height

Figure 1 — Clear height

6.3 Specific safety requirements and test methods

6.3.1 General

The test methods and requirements in 6.3.2 to 6.3.8 apply only to units and components, which fall under the principles in 6.2.

6.3.2 Shelves

6.3.2.1 General

Shelves shall not fall down when tested as specified in 6.3.2.2 and 6.3.2.3.

6.3.2.2 Under horizontal Force

Apply a horizontal outwards force of 50 % of the weight of the unloaded shelf to the middle of the front edge.

6.3.2.3 Under vertical Force

Apply a vertical downward force of 100 N to any point 25 mm in from the front edge.

6.3.3 Shelf supports

For units with an indeterminate number of shelves, unless otherwise specified, divide the internal height of the article in mm by 200 and take the nearer integer. This number minus 1 shall then be the number of shelves to be installed.

Load the shelves to be tested uniformly with the load specified in Table 1, except at 220 mm from one support, where the impact plate (5.8) shall be tipped over 10 times at a point as close to the support as possible (see Figure 2). The striking surface of the impact plate (5.8) shall be that faced with rubber.

All supports of the shelf shall be tested.

After the test, the shelf and the shelf supports shall show no fracture or other damage that can affect the safety.

Dimensions in millimetres

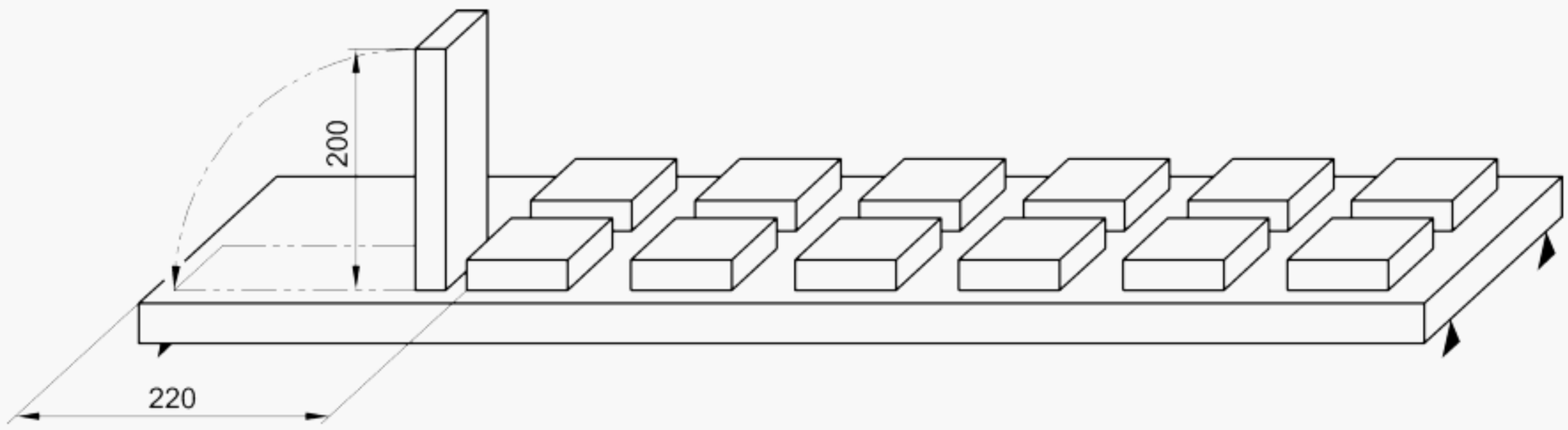

Figure 2 — Strength test of shelf supports

6.3.4 Pivoted doors

This test applies to all doors hinged to the unit on one vertical side (including folding doors).

Load the door as shown in Figure 3 with a load of 30 kg.

Swing the door 10 full cycles (back and forth) from a position 45° from fully closed to a position 10° from fully opened, up to a maximum of 135°.

Opening and closing can be done by hand using 3 s to 5 s for opening and 3 s to 5 s for closing.

After the test the door shall remain attached to the unit.

Dimensions in millimetres

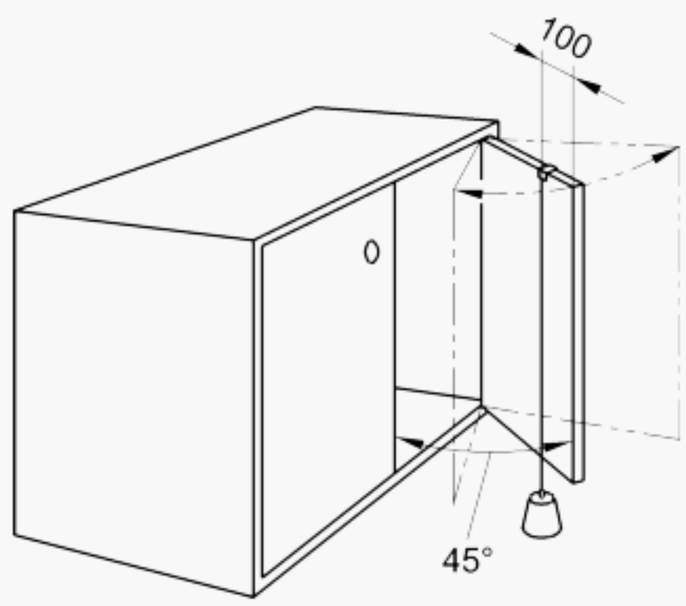

Figure 3 — Load test of pivoted doors

6.3.5 Sliding doors (including horizontal roll fronts)

This test applies to all doors sliding horizontally including those constructed from hinged elements.

The door shall be opened/closed by means of a string or cord attached to the centre of the handle. If the handle has a length greater than 200 mm, the string shall be attached 100 mm below the top of the handle up to a maximum height from the floor of 1 200 mm (see Figure 4).

If the door has no handle, the string shall be attached at the middle of the door height.

Determine the mass W, required to just move the door. The test mass shall be 4 kg plus the mass W.

Close/open the door/roll front 10 times towards the fully closed/opened positions using the test mass (W + 4) kg.

Start the movement 300 mm from the closed/opened positions respectively. The test mass shall act until (10 ± 5) mm before the door/roll front is fully closed/opened.

The test shall be carried out as shown in Figure 4.

After the test there shall be no fracture or other damage that can affect the safety.

Dimensions in millimetres

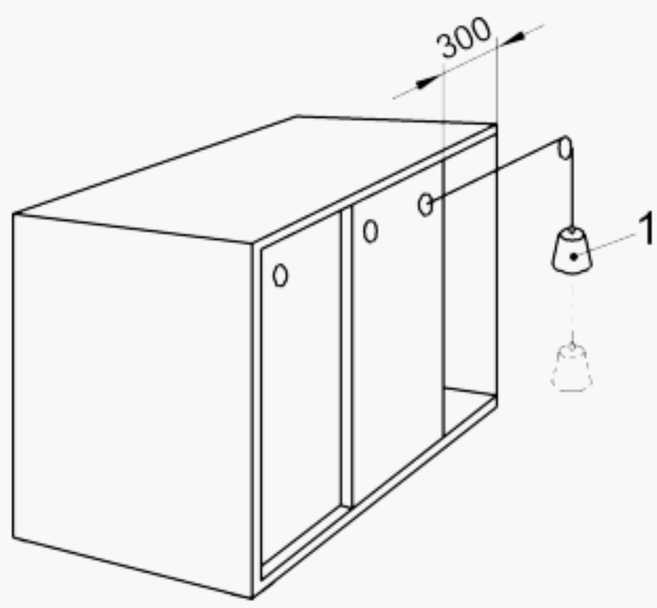

Key

1 (W + 4) kg

Figure 4 — Slam open/shut of sliding doors

6.3.6 Extension elements

The slam open test applies to all types of extension elements with stops in the open position.

Place the extension elements on its runners and load with glass marbles (5.7) according to Table 1. Close the extension element to a position 300 mm from the fully open position (or fully close the extension element if the travel is less than 300 mm).

Testing shall be carried out with an apparatus calibrated according to one of the two methods specified in Annex A.

Apply the force to the handle or, in case of two handles in the middle between the handles. In case of extension elements without a handle applied the force at the same level as the runners.

The slamming force shall be applied until (10 ± 5) mm before the extension elements reaches its end travel.

Slam the extension elements open 10 times.

Throughout the test, the extension elements shall not fall out of the cabinet.

6.3.7 Flaps

This test only applies to flaps intended to be loaded when used in the open position, e.g. as a work surface.

The flap shall not be loaded according to Table 1.

Apply a vertical force 10 times with 200 N as shown in Figure 5 using the loading pad (5.4).

During each application maintain the load for 10 s.

After the test, the flap and/or the unit shall show no fracture or other damage that can affect the safety.

Dimensions in millimetres

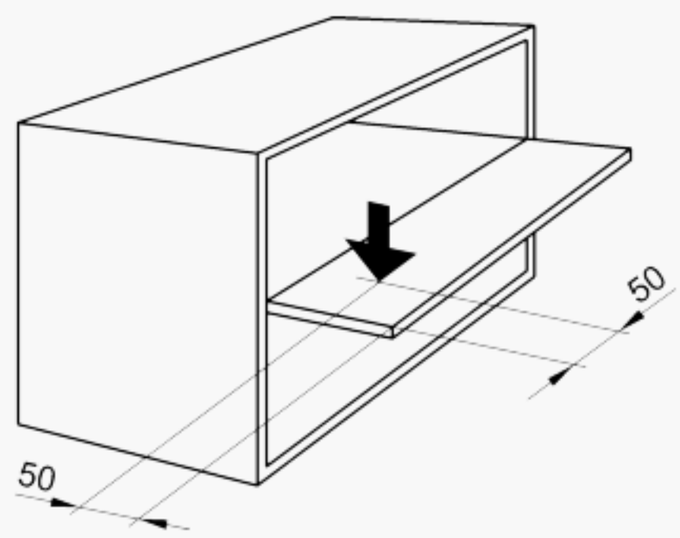

Figure 5 — Strength test of flaps

6.3.8 Top surfaces and worktops

6.3.8.1 General

This test applies to all top surfaces and worktops which are less than or equal to 1 000 mm above the floor surface.

The surface shall not be loaded according to Table 1.

6.3.8.2 Top surface

Apply a vertical force 10 times with 750 N at the position most likely to cause failure but not less than 50 mm from the edge using the loading pad (5.4).

During each application maintain the load for 10 s.

After the test the top surface and/or unit shall show no fracture or other damage that can affect the safety.

6.3.8.3 Worktops

Apply a vertical force 10 times with 1 000 N at the position most likely to cause failure but not less than 50 mm from the edge using the loading pad (5.4).

During each application maintain the load for 10 s.

After the test the worktop surface and/or unit shall show no fracture or other damage that can affect the safety.

6.4 Wall and top hanging units

6.4.1 General

The unit shall be mounted according to the manufacturer's installation instructions.

Adjustable wall attachment devices shall be adjusted to the maximum depth (as far from the wall as possible) and to the mid of the height adjustment range. The unit shall then be levelled by means of distance devices placed as low and as far apart as possible.

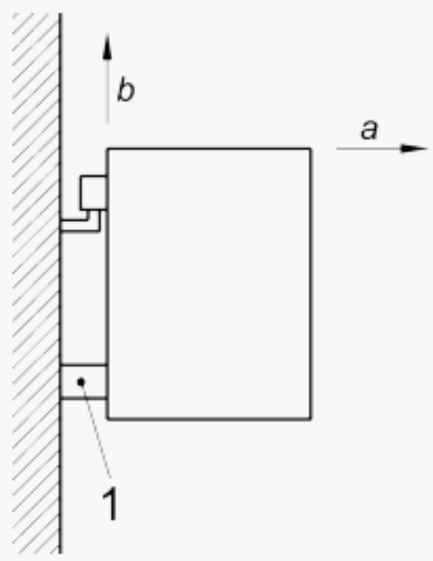

Key

a Depth adjustment
b Height adjustment
1 Distance device

Figure 6 — Adjusting device

After the testing in accordance with 6.4.2 and 6.4.3 the unit shall remain attached by its mountings and shall support the test load in accordance with 6.4.3.

6.4.2 Movable parts, shelf supports and top surfaces

As soon as possible after the loading according to Table 1, carry out the following tests regardless of mass and height of centre of gravity of components:

— 6.3.3: Shelf supports;

— 6.3.4: Pivoted doors;

— 6.3.5: Sliding doors (including horizontal roll fronts);

— 6.3.6: Extension elements;

— 6.3.7: Flaps;

— 6.3.8.2: Top surfaces (≤ 1 000 mm from the floor);

— 6.3.8.3: Work tops (≤ 1 000 mm from the floor).

These tests shall be carried out on those parts most likely to cause failure to the wall attachment.

It is acceptable that for each test components with a total mass less than 10 kg can become detached.

6.4.3 Overload

After carrying out the tests in 6.4.2, increase the load on all the storage areas according to the following principle.

If the number of shelves is not determined by the structure of the unit, divide the internal height of the unit in millimetres by 200 and take the lower integer. This number minus 1 shall then be the number of shelves to be used during testing.

Bottom:	250 kg/m^2
First shelf:	150 kg/m^2
Second shelf:	100 kg/m^2
Third and following shelves:	65 kg/m^2
Top surface:	50 kg/m^2

If the volume of the unit, calculated by the inner width, depth and height, is greater than 0,225 m^3, the loads shall be multiplied by the factor R:

$$R = \frac{1{,}2}{(0{,}75 + 2\,V)} \qquad (1)$$

where

V is the volume of the unit in m^3.

When reduction of the load is necessary, it shall be removed from the bottom.

The loading time shall be one week.

An example is shown in Annex B (informative).

6.5 Impact test for vertical glass components

This test need not be done if the glass fulfils the requirements in EN 12150-1:2000, Clause 8, fragmentation test, or where the mode of breakage (β) according to EN 12600, is Type B or Type C.

Load storage areas according to Table 1.

The test shall be carried out according to EN 14072 with a drop height of 70 mm.

The impact point shall be on the most adverse corner 100 mm from each visible edge of the glass.

The glass shall be impacted once.

6.6 Stability

6.6.1 General

The stability tests in 6.6.2 and 6.6.3 shall be carried out with the unit placed on the sloping floor surface (5.1) in any direction relative to the unit most likely to cause the unit to overturn (See 4.1).

Units designed to be placed against the wall shall not be tested in the rearwards direction. Castors shall be in the position most likely to cause the unit to overturn.

6.6.2 Free-standing kitchen floor units with worktops

Free-standing kitchen floor units with worktops shall, when unloaded, not overturn when an outwards overturning moment of 200 Nm is applied.

During testing, all doors, flaps and extension elements shall be closed.

6.6.3 All other storage units

6.6.3.1 Doors, extension elements and flaps closed, all storage areas unloaded

Units with a height of ≤ 1 000 mm.

Apply a vertical force of 750 N on the top surface acting 50 mm from the outer edge of the unit at any point likely to cause overturning.

During testing, the unit shall not overturn.

Units with a height of > 1 000 mm.

Apply a vertical force of 350 N together with an outward moment of 40 Nm on the top surface acting 50 mm from the outer edge of the unit at any point likely to cause overturning.

During testing, the unit shall not overturn.

6.6.3.2 Opening doors, extension elements and flaps

All storage areas unloaded.

When two or more doors are fitted, the test shall be carried out on one closed door with the other door opened 90°.

When necessary, the test shall also be carried out with doors and flaps opened to provide access to other extension elements or flaps.

Locking mechanism shall be unlocked.

Apply a horizontal force, which is just sufficient to open doors, extension elements or flaps. The opening force shall be applied at the centre of the handhold, handle, knob, key etc.

During testing, the unit shall not overturn.

6.6.3.3 Doors, extension elements and flaps opened and unlocked

6.6.3.3.1 All storage areas unloaded

Doors shall be opened 90° and extension elements shall be fully opened, except where there are no open stops, in which case they shall be opened to two thirds of the internal length. Flaps shall be fully opened.

Extension elements and flaps shall be opened across the full width of the unit. Only one extension element in each vertical line of extension elements shall be opened so as to produce the configuration most likely to cause overturning.

Apply a vertical force of 50 N to any point most likely to cause overturning, on the centreline of the front of an extension element or 50 mm from the outer edge of a door or a flap.

During testing, the unit shall not overturn.

6.6.3.3.2 All storage areas loaded

All storage areas shall be loaded with the loads specified in Table 2.

Table 2 — Loads for testing stability

Component	Load
All horizontal storage areas, including shelves, bottoms, tops and flaps	0,325 kg/dm^2
Extension elements and baskets with internal height, H, ≤ 1 dm:	0,2 kg/dm^3
Extension elements and baskets with internal height, H, between 1 dm and 2,5 dm:	(0,2667 – 0,0667H) kg/dm^3 (H in dm)
Extension elements and baskets with internal height, H, ≥ 2,5 dm clear height:	0,1 kg/dm^3
Hanging rails	2 kg/dm
Suspended filing pockets	1,25 kg/dm

Doors shall be opened 90° and extension elements shall be fully opened, except where there are no open stops, in which case they shall be opened to two thirds of the internal length. Flaps shall be fully opened.

Extension elements shall be opened across the full width of the unit. Only one extension element in each vertical line of extension elements shall be opened so as to produce the configuration most likely to cause overturning.

Apply a vertical force of 20 % of the total mass of the component (see 6.2.3) to any point most likely to cause overturning, on the centreline of the front of an extension element or 50 mm from the outer edge of a door or a flap.

During testing, the unit shall not overturn.

6.6.3.4 Doors, extension elements and flaps closed and locked

All storage areas shall be loaded with the loads specified in Table 2.

When two or more doors can be locked, the test shall be carried out on one closed door with the other door opened at 90°.

When necessary, the test shall also be carried out with doors and flaps opened to provide access to other extension elements or flaps.

Locking mechanisms shall be locked.

Apply an outward overturning moment of 100 Nm in turn to all locked doors, extension elements or flaps. The force shall be applied to the centre of the handhold, handle, knob, etc. in the direction of opening.

During testing, the unit shall not overturn.

6.6.4 Floor standing units intended to be attached to the building

The unit shall be mounted according to the manufacturer's installation instructions and unloaded.

Apply a horizontal outwards force of 200 N to the middle of the front edge of the top of the unit. The force shall be maintained for not less than 10 s and not more than 15 s.

After the test, the unit shall remain attached to the wall surface.

7 Test report

The test report shall include the following items:

a) reference to this European Standard;

b) details of the furniture tested;

c) manner of mounting if appropriate;

d) any defects observed before testing;

e) test results according to the applicable clauses;

f) details of any deviations from this European Standard;

g) name and address of the test facility;

h) date of test.

ANNEX A
(normative)

Apparatus for slam-open test of extension elements

A.1 Principle

Lightweight (empty) extension elements are slammed at consistently higher speeds than heavy (full) extension elements, but friction does not significantly affect the slamming speed.

Standard 'empty' (5 kg) and 'full' (35 kg) extension elements with minimal friction are used to simulate these conditions. Using these extension elements the speed of the extension element slamming apparatus is adjusted to the slamming velocities specified.

A.2 Apparatus

The following two apparatus are suggested for the slam tests of extension elements:

A.2.1 Pneumatic apparatus

This consists of a pneumatically actuated low-friction piston/cylinder with a means of regulating the pressure of air-supplied from a reservoir. The airflow between the piston/cylinder and the reservoir is controlled by an air-operated valve, which allows the air stored in the reservoir to flow to the piston/cylinder rapidly, when the control valve is operated. This rate of flow is controlled by the incorporation of connecting tubing of specified internal diameters and lengths (see Figure A.1).

A.2.2 Weight and string system

The extension element shall be opened by a hanging weight (*m*) that is attached to the extension element by means of a string or cord and pulley with low friction bearing (see Figure A.2).

A.3 Calibration

A.3.1 Pneumatic apparatus

Using two standard extension elements, having masses of 5 kg and 35 kg respectively and exhibiting a total frictional force in the runners of not greater than 10 N, calibrate the apparatus to produce opening velocities of 1,3 m/s for 5 kg and 1,0 m/s for 35 kg.

This may conveniently be achieved by setting the pressure to produce the calibration velocity for the 35 kg extension element and then adjusting the length of the tube from the pressure regulator (see Figure A.1) to produce the calibration velocity for the 5 kg extension element.

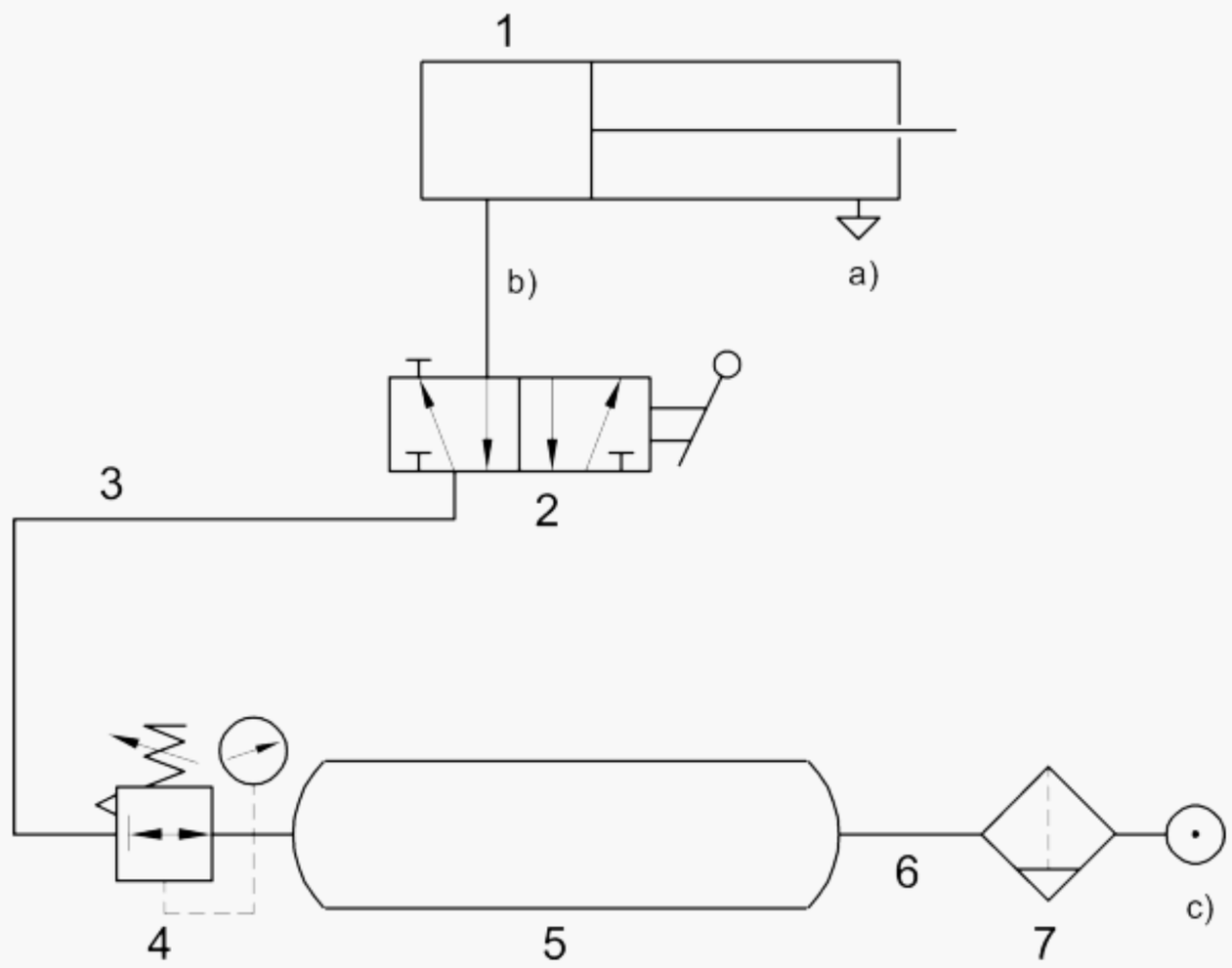

Key

1 Cylinder Φ 40, stroke = 300

2 Valve ¼ inch. Nominal air flow > 900 l/min

3 Tube length 720, internal diameter 6

4 Pressure regulator. Nominal air flow > 900 l/min.

5 Air reservoir

6 Tube length 1 040, internal diameter 3

7 Air cleaner

a) Free outlet

b) Valve to be mounted directly on cylinder

c) Primary pressure 6 bar

Figure A.1 — Circuit diagram for pneumatic extension element slamming apparatus

A.3.2 Weight and string system

The mass (m) is calculated by the following formula

$$m = 2{,}5 \times \sqrt[3]{M} \qquad \text{(A.1)}$$

M is the total mass of the extension element.

NOTE The slam velocities will be equal to the slam velocities exerted by the pneumatic apparatus (see A.3.1).

Dimensions in millimetres

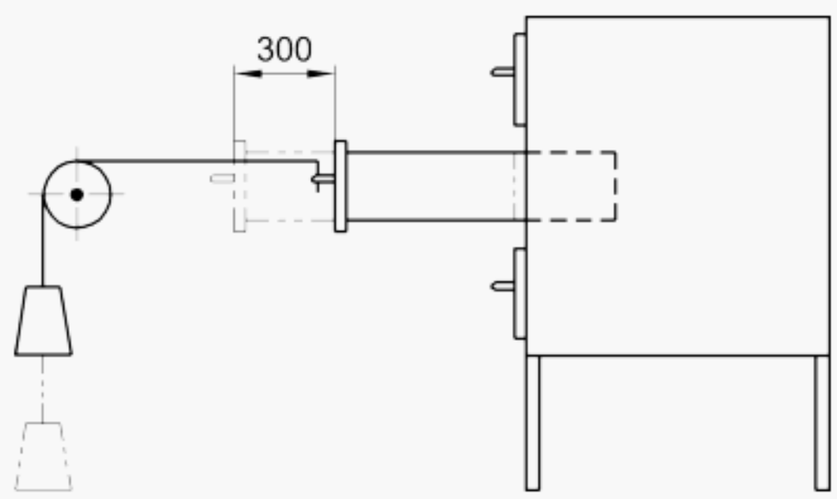

Figure A.2 — Slam open test of extension element with hanging weight

A.4 Method

Close the extension element to 300 mm from fully open or fully close the extension element if the length of travel is less than 300 mm (see Figure A.2).

Slam-open the extension element from that position.

ANNEX B
(informative)

Example of loading of wall hanging units (see 6.4.3 overload)

Wall hanging unit with internal dimensions

— width: 1,00 m
— depth: 0,35 m
— height: 0,85 m

= 0,30 m^3 volume

Number of shelves = internal height/200 = 4,25. This means 3 shelves with an area of 0,35 m^2 each. According to this the following loads apply:

Bottom = 0,35 $m^2 \times$ 250 kg/m^2 = 87,50
First shelf: = 0,35 $m^2 \times$ 150 kg/m^2 = 52,50
Second shelf: = 0,35 $m^2 \times$ 100 kg/m^2 = 35,00
Third shelf = 0,35 $m^2 \times$ 65 kg/m^2 = 22,75
Top surface = 0,35$m^2 \times$ 50 kg/m^2 = 17,50

Test load without load reduction: 215,25 kg

Because of the inner volume of 0,30 m^3 a reduction of the load is required:

Reduction factor $R = \dfrac{1{,}2}{(0{,}75 + 2\,V)} = \dfrac{1{,}2}{(0{,}75 + 2 \times 0{,}30)} = 0{,}89$ (B.1)

Reduction test load: 215,25 × 0,89 = 191,57 kg

Reduction of bottom load: 215,25 – 191,57 = 23,68 kg

Reduced test load of bottom: 87,5 – 23,68 = 63,82 kg

ANNEX C
(informative)

Relation between safety requirements, total mass and position of centre of gravity

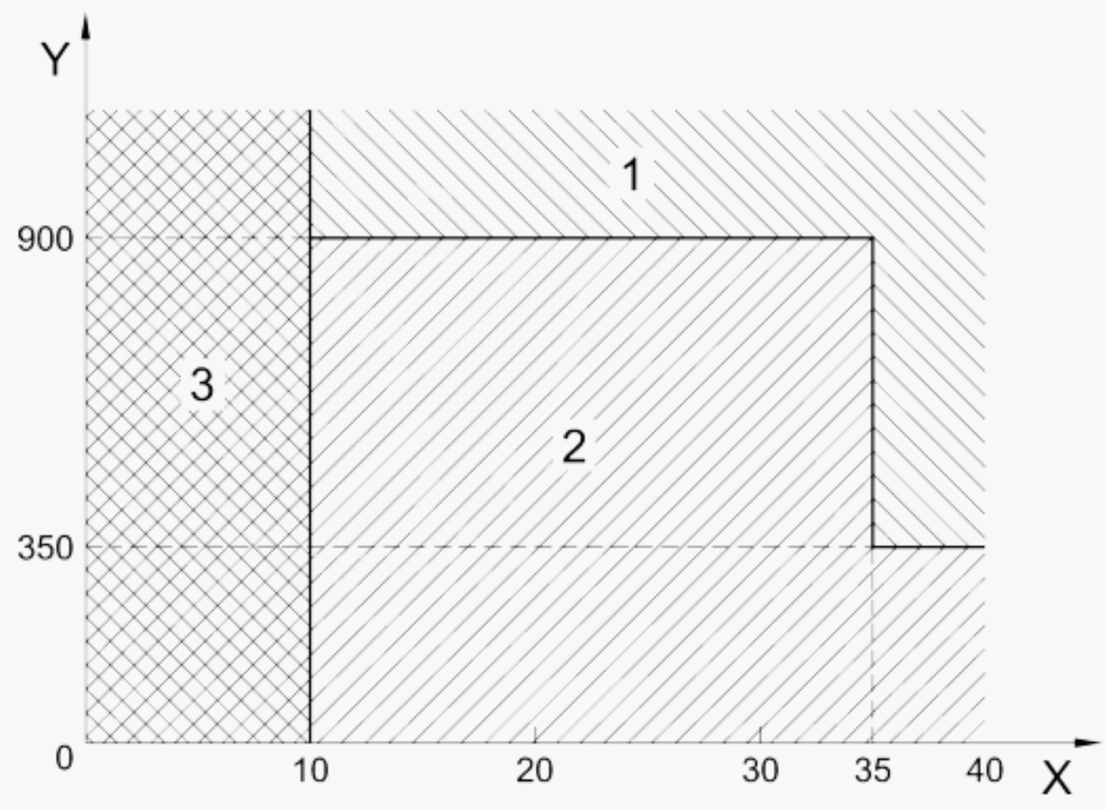

Key

x Total mass in kg
y Position of centre of gravity in mm

1: Zone 1 Safety requirements and test methods for all items (e.g. extension elements have to fulfil the requirements in accordance with 6.1).

2: Zone 2 Safety requirements and test methods for extension elements (open stops have to be tested with a force of 200 N).

3: Zone 3 No safety requirements and test methods.

Figure C.1 — Relation between safety requirements, total mass and position of centre of gravity

Bibliography

[1] EN 71-1:1998/A7:2002, Safety of toys — Part 1: Mechanical and physical properties.