EUROPEAN STANDARD

NORME EUROPÉENNE

EUROPÄISCHE NORM

EN 13587

May 2010

ICS 75.140; 91.100.50

Supersedes EN 13587:2003

English Version

Bitumen and bituminous binders - Determination of the tensile properties of bituminous binders by the tensile test method

Bitumes et liants bitumineux - Détermination des caractéristiques de traction des liants bitumineux par la méthode d'essai de traction

Bitumen und bitumenhaltige Bindemittel - Bestimmung der Streckeigenschaften von bitumenhaltigen Bindemitteln mit dem Zugprüfverfahren

This European Standard was approved by CEN on 23 April 2010.

CEN members are bound to comply with the CEN/CENELEC Internal Regulations which stipulate the conditions for giving this European Standard the status of a national standard without any alteration. Up-to-date lists and bibliographical references concerning such national standards may be obtained on application to the CEN Management Centre or to any CEN member.

This European Standard exists in three official versions (English, French, German). A version in any other language made by translation under the responsibility of a CEN member into its own language and notified to the CEN Management Centre has the same status as the official versions.

CEN members are the national standards bodies of Austria, Belgium, Bulgaria, Croatia, Cyprus, Czech Republic, Denmark, Estonia, Finland, France, Germany, Greece, Hungary, Iceland, Ireland, Italy, Latvia, Lithuania, Luxembourg, Malta, Netherlands, Norway, Poland, Portugal, Romania, Slovakia, Slovenia, Spain, Sweden, Switzerland and United Kingdom.

EUROPEAN COMMITTEE FOR STANDARDIZATION
COMITÉ EUROPÉEN DE NORMALISATION
EUROPÄISCHES KOMITEE FÜR NORMUNG

Management Centre: Avenue Marnix 17, B-1000 Brussels

© 2010 CEN All rights of exploitation in any form and by any means reserved worldwide for CEN national Members.

Ref. No. EN 13587:2010: E

Contents

Page

Foreword 3
1 Scope 4
2 Normative references 4
3 Terms and definitions 4
4 Principle 5
5 Apparatus 5
6 Preparation and conservation of samples 6
7 Procedure 7
8 Calculation and expression of results 7
9 Precision 7
10 Test report 7

Foreword

This document (EN 13587:2010) has been prepared by Technical Committee CEN/TC 336 “Bituminous binders”, the secretariat of which is held by AFNOR/BNPé.

This European Standard shall be given the status of a national standard, either by publication of an identical text or by endorsement, at the latest by November 2010, and conflicting national standards shall be withdrawn at the latest by November 2010.

Attention is drawn to the possibility that some of the elements of this document may be the subject of patent rights. CEN [and/or CENELEC] shall not be held responsible for identifying any or all such patent rights.

This document supersedes EN 13587:2003.

This document has been prepared under a mandate given to CEN by the European Commission and the European Free Trade Association, and supports essential requirements of EC Directive 97/23/EC.

According to the CEN/CENELEC Internal Regulations, the national standards organizations of the following countries are bound to implement this European Standard: Austria, Belgium, Bulgaria, Croatia, Cyprus, Czech Republic, Denmark, Estonia, Finland, France, Germany, Greece, Hungary, Iceland, Ireland, Italy, Latvia, Lithuania, Luxembourg, Malta, Netherlands, Norway, Poland, Portugal, Romania, Slovakia, Slovenia, Spain, Sweden, Switzerland and the United Kingdom.

1 Scope

This European Standard specifies a method for determining the tensile properties of a bituminous binder, in particular those of a polymer modified bitumen, by means of a tensile test.

NOTE The tensile properties, more particularly the tensile stress, the elongation and energy, at the yield point and on fracture, are customarily used as a criterion for assessing the quality of these materials.

WARNING — The use of this European Standard may involve hazardous materials, operations and equipment. This European Standard does not purport to address all of the safety problems associated with its use. It is the responsibility of the user of this European Standard to establish appropriate safety and health practices and determine the applicability of regulatory limitations prior to use.

2 Normative references

The following referenced documents are indispensable for the application of this document. For dated references, only the edition cited applies. For undated references, the latest edition of the referenced document (including any amendments) applies.

EN 58, *Bitumen and bituminous binders — Sampling bituminous binders*

EN 12594, *Bitumen and bituminous binders — Preparation of test samples*

EN 13703, *Bitumen and bituminous binders — Determination of deformation energy*

EN ISO 527 (all parts), *Plastics — Determination of tensile properties*

ISO 5893, *Rubber and plastics test equipment — Tensile, flexural and compression types (constant rate of traverse) — Specification*

3 Terms and definitions

For the purposes of this document, the following terms and definitions apply.

3.1
tensile force
force undergone by a specimen subjected to extension

NOTE The unit is expressed in Newton (N).

3.2
tensile stress
ratio of the tensile force per unit area of the original cross-section

NOTE The unit is expressed in Newton per square meter (N/m²).

3.3
elongation
increase in length of a specimen, expressed in metres

NOTE Elongation is also expressed in % from the initial length. It is calculated as [(new length – initial length)/initial length] x 100.

3.4
brittle break
rupture happening at the beginning of the test before the flowing threshold when the stress-strain curve is still linear

3.5
flowing threshold
maximum of the stress-strain curve

4 Principle

A specimen, held by its ends between two jaws, is extended in a chamber, regulated at the test temperature, at constant speed until fracture or a given percent elongation is achieved. In general, stress and percent elongation are noted at the flowing threshold, at breaking and at a percent elongation of 400 %.

5 Apparatus

Usual laboratory equipment and glassware, together with the following:

5.1 Test machine, in accordance with ISO 5893.

5.1.1 The machine shall be capable of maintaining a constant speed of the moving element at the speed chosen for the test to an accuracy of within 2 % of the chosen speed.

5.1.2 The specimen attachment device (located on the stationary part and on the moving part) shall:

— ensure sufficient clamping of the specimen heads throughout the entire test, to prevent slipping;

— not exert, on any part of the ends of the specimen, localized stresses liable to cause tearing or fracture of the specimen.

5.1.3 Appropriate facilities shall permit the following measurements to be made:

— tensile force applied on the specimen over the range 1 N to 500 N to an accuracy of ± 1 %;

— elongation of the specimen, either by following the movement of the attachment points or by means of an optical extensometer over the range 0 mm to not less than 250 mm to an accuracy of ± 1 mm.

5.1.4 Optical extensometer.

If an optical extensometer is used its reflectory devices shall be positioned on the bituminous specimen as near as possible to the specimen heads.

The distance between the two reflectory devices is approximately 45 mm to 50 mm.

The facilities used shall be recorded in the test report.

5.2 Temperature controlled chamber, capable of maintaining the specimen and the attachment device at the specified temperature throughout the test to an accuracy of ± 0,5 °C, provided with a means of checking the test temperature. The control thermometer shall be placed near the specimen.

5.3 Recording device, for force applied and elongation of the test specimen.

5.4 Measurement apparatus, capable of measuring the thickness of the test specimen to an accuracy of ± 0,1 mm.

5.5 Moulds allowing moulding of specimens (see Figure 1), e.g. made in silicone elastomer.

Table 1 — Dimensions of the mould H2 in millimetres

Type of specimen	*A*	*B*	*E*	*F*	*C*	*G*	*R*	*R'*
H2	25 ± 0,5	4,0 ± 0,1	3,0 ± 0,3	75 ± 2	12,5 ± 1,0	12,5 ± 1,0	8,0 ± 0,3	12,5 ± 0,3

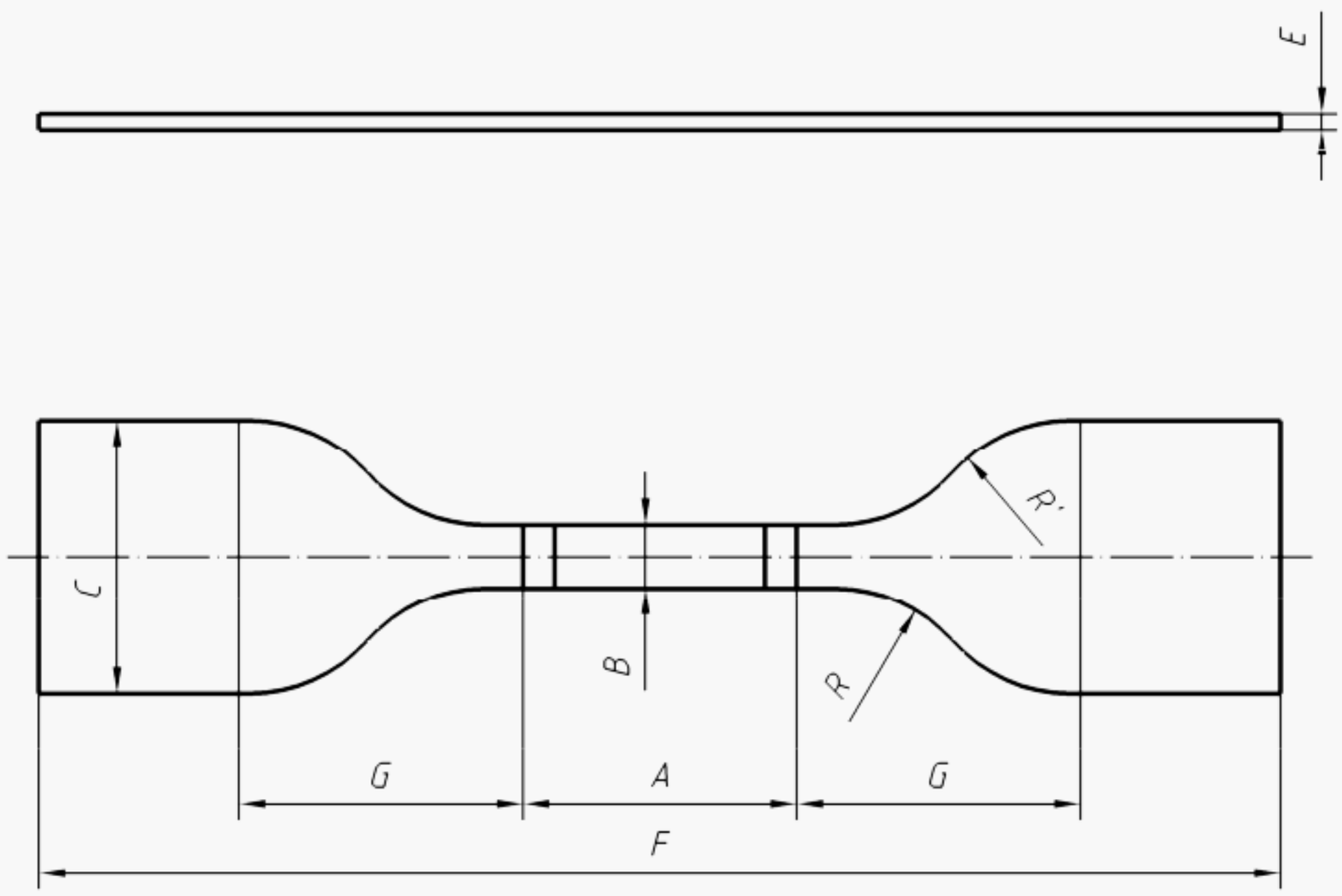

Figure 1 — Dumbbell-shaped binder specimen H2

The reference length or initial length of the H2 specimens is $Ko = A + 2G$. Specimens of different geometry can be used (if the preparation of H2 specimens is too difficult or impossible) but should be in accordance with the reference standards (i.e. EN ISO 527 or ISO 5893); this should be mentioned explicitly in the test report. The results obtained from such specimens can be used only for comparison with a binder tested under the same conditions.

6 Preparation and conservation of samples

Take the sample in accordance with EN 58. Prepare the sample in accordance with EN 12594. Pour surplus of material directly in the mould, let the specimens cool for about one hour to room temperature, and cut of the surplus with a heated spatula.

As an alternative for sample preparation the dumbbell-shaped specimen can be produced by cutting a thin sheet of the bituminous binder having the correct thickness by a model which will produce a specimen with the dimensions given in Table 1.

Reject specimens exhibiting defects. Keep specimens in their moulds and in a refrigerator at a maximum temperature of 10 °C and for a maximum of four days before the test.

7 Procedure

Measure the thickness, E, of the specimen with an accuracy of 0,1 mm.

Set the apparatus to the test temperature.

Maintain the chamber containing the specimen at the test temperature for at least one hour.

Attach the specimen in the attachment device in accordance with EN ISO 527 (all parts) with a distance between the jaws, K_o, of 50 mm ± 0,5 mm for specimens of the H2 type.

Wait five minutes after stabilisation of the test temperature ± 0,5 °C and start the test.

Record the force and elongation for the test specimen, as indicated in Clause 8.

Repeat any test in which a brittle break occurs (break before the flowing threshold). After two brittle breaks, in the thin part of the specimen, stop the test and record the binder as “brittle”.

General values of test temperature and test speed are the following:

— Temperature: -20 °C, -10 °C, -5 °C, 0 °C, 5 °C, 10 °C, 15 °C, 20 °C.

— Speed: 1 mm/min, 10 mm/min, 50 mm/min, 100 mm/min, 500 mm/min.

8 Calculation and expression of results

This document specifies only a test procedure and test result is calculated according to EN 13703. Only the force-elongation curves are to be recorded.

For the analysis of recorded parameters refer to EN ISO 527 (all parts). The reference length for the calculation of the percent elongation is K_o, the distance between the attachment points (50 mm for H2 type specimens).

For at least three significant tests, calculate stress and percent elongation at the flowing threshold, at fracture, at a percent elongation of 400 % and at maximum percent elongation if fracture is not reached.

Give the result as the calculated mean of the three values.

9 Precision

NOTE Since the result is calculated according to EN 13703, precision data from round robin test are indicated in EN 13703.

10 Test report

The test report shall contain at least the following information:

a) type and complete identification of the sample under test;

b) reference to this European Standard;

c) specimen preparation method;

d) type of test specimens and the distance K_o (50 mm for H2 type specimens);

e) test temperature and the speed;

f) number of specimens subjected to the test; and the number of specimens rejected;

g) results of the test (see Clause 8);

h) any deviation, by agreement or otherwise, from the procedure specified;

i) date of the test.