EUROPEAN STANDARD

NORME EUROPÉENNE

EUROPÄISCHE NORM

EN 13029

November 2009

ICS 55.120

Supersedes EN 13029:2001

English Version

Packaging - Light-gauge metal packaging - Apertures for plug-in plastic closures

Emballage - Emballages métalliques légers - Ouverture de récipients métalliques équipés de goulots en matière plastique

Verpackungen - Feinstblechverpackungen - Öffnungen für aufsteckbare Verschlüsse aus Kunststoff

This European Standard was approved by CEN on 10 October 2009.

CEN members are bound to comply with the CEN/CENELEC Internal Regulations which stipulate the conditions for giving this European Standard the status of a national standard without any alteration. Up-to-date lists and bibliographical references concerning such national standards may be obtained on application to the CEN Management Centre or to any CEN member.

This European Standard exists in three official versions (English, French, German). A version in any other language made by translation under the responsibility of a CEN member into its own language and notified to the CEN Management Centre has the same status as the official versions.

CEN members are the national standards bodies of Austria, Belgium, Bulgaria, Cyprus, Czech Republic, Denmark, Estonia, Finland, France, Germany, Greece, Hungary, Iceland, Ireland, Italy, Latvia, Lithuania, Luxembourg, Malta, Netherlands, Norway, Poland, Portugal, Romania, Slovakia, Slovenia, Spain, Sweden, Switzerland and United Kingdom.

EUROPEAN COMMITTEE FOR STANDARDIZATION
COMITÉ EUROPÉEN DE NORMALISATION
EUROPÄISCHES KOMITEE FÜR NORMUNG

Management Centre: Avenue Marnix 17, B-1000 Brussels

© 2009 CEN All rights of exploitation in any form and by any means reserved worldwide for CEN national Members.

Ref. No. EN 13029:2009: E

Contents

Page

Foreword 3
Introduction 4
1 Scope 5
2 General requirements 5
3 Dimensions 6
Bibliography 9

Foreword

This document (EN 13029:2009) has been prepared by Technical Committee CEN/TC 261 “Packaging”, the secretariat of which is held by AFNOR.

This European Standard shall be given the status of a national standard, either by publication of an identical text or by endorsement, at the latest by May 2010, and conflicting national standards shall be withdrawn at the latest by May 2010.

Attention is drawn to the possibility that some of the elements of this document may be the subject of patent rights. CEN [and/or CENELEC] shall not be held responsible for identifying any or all such patent rights.

This document supersedes EN 13029:2001.

This edition includes specifications for apertures for a second type of closure.

According to the CEN/CENELEC Internal Regulations, the national standards organizations of the following countries are bound to implement this European Standard: Austria, Belgium, Bulgaria, Cyprus, Czech Republic, Denmark, Estonia, Finland, France, Germany, Greece, Hungary, Iceland, Ireland, Italy, Latvia, Lithuania, Luxembourg, Malta, Netherlands, Norway, Poland, Portugal, Romania, Slovakia, Slovenia, Spain, Sweden, Switzerland and the United Kingdom.

Introduction

Efficient packaging is of great importance for the distribution and the protection of goods. Insufficient or inappropriate packaging can lead to damage or wastage of the contents of the pack.

General use metal containers may be fitted with a closure system made mainly of plastic. The filler can purchase these components from different suppliers. The closure system is inserted into the aperture after the product has been dispensed into the container. The reliability of assembly and performance will depend upon the precision of these items. These containers may need to be tested and certified for Carriage of Dangerous Goods. This European Standard offers two piercing types (A and B). Type B gives improved emptying with minimum product residue in the container.

The difference between piercing Type A and Type B (REL) lies in the piercing design as well as the position of the piercing relative to the lid. The Type A piercing is on the same level as the lid and the closure itself clips into the lid, whereas the clipped-in portion of the closure is on the inside of the container; therefore the Type A piercing leaves a higher residue of product in the fully dispensed container. The Type B piercing is in an elevated position relative to the lid, so that the clipped-in portion of the closure is at the same level as the lid surface. Due to the higher position relative to the lid surface of the Type B piercing, an optimal emptying of the liquid out of the container is possible, which adds to consumer convenience and waste reduction.

The Type A system is more simplified regarding piercing technology. A wider production window is given. Type B technology requires higher technical tool manufacturing as well as handling and application. Both systems have been well established in the market and proven for many years.

1 Scope

This European Standard specifies the dimensions and profile of the aperture for Type A and Type B plug-in plastic closures used in round and non-round metal containers of nominal wall thickness equal to or less than 0,49 mm.

2 General requirements

If a burr is produced at the piercing diameter it shall be kept to a minimum to avoid leakage.

The thickness, hardness and shape of the sheet around the aperture shall be such that the top end is not deformed by the axial load when the closure is pressed in.

Figure 1 and Figure 2 show examples of Type A and Type B closures respectively.

NOTE The specifications for the metal substrate are laid down in EN 10202, packaging types are described in EN ISO 90-2 and the recommended dimensions may be found in EN 13025-1 and EN 13026.

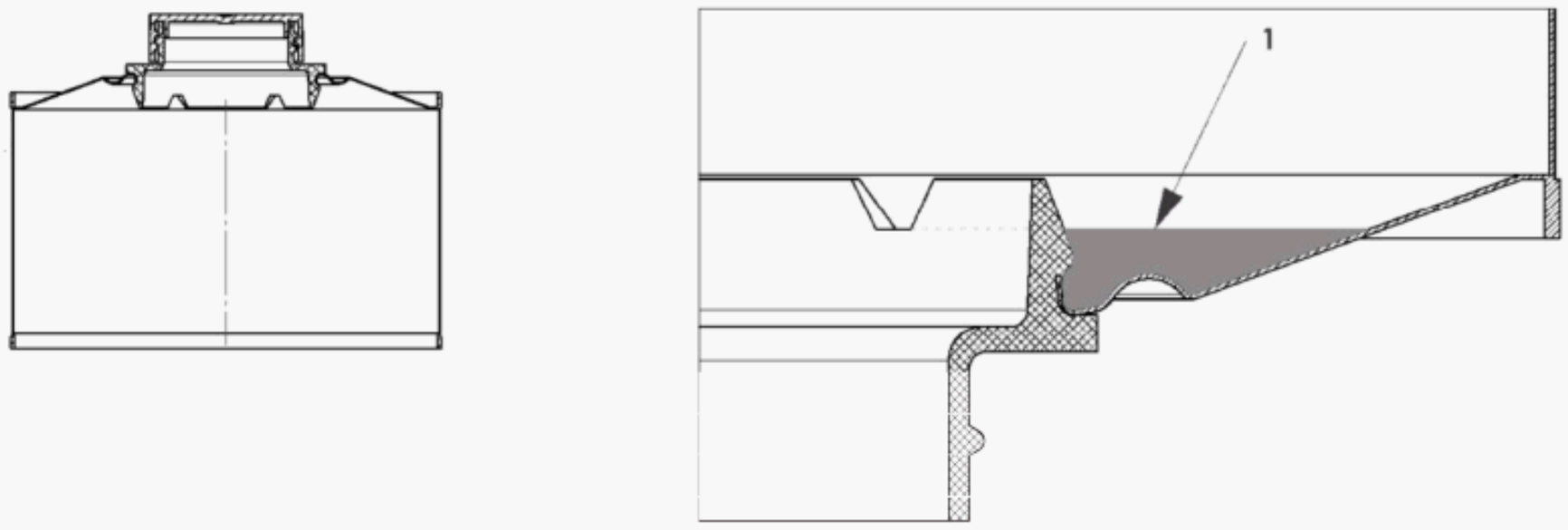

Key

1 Remaining quantity

NOTE The figure on the right is a detail of the figure on the left, but inverted.

Figure 1 — Example of Type A closure

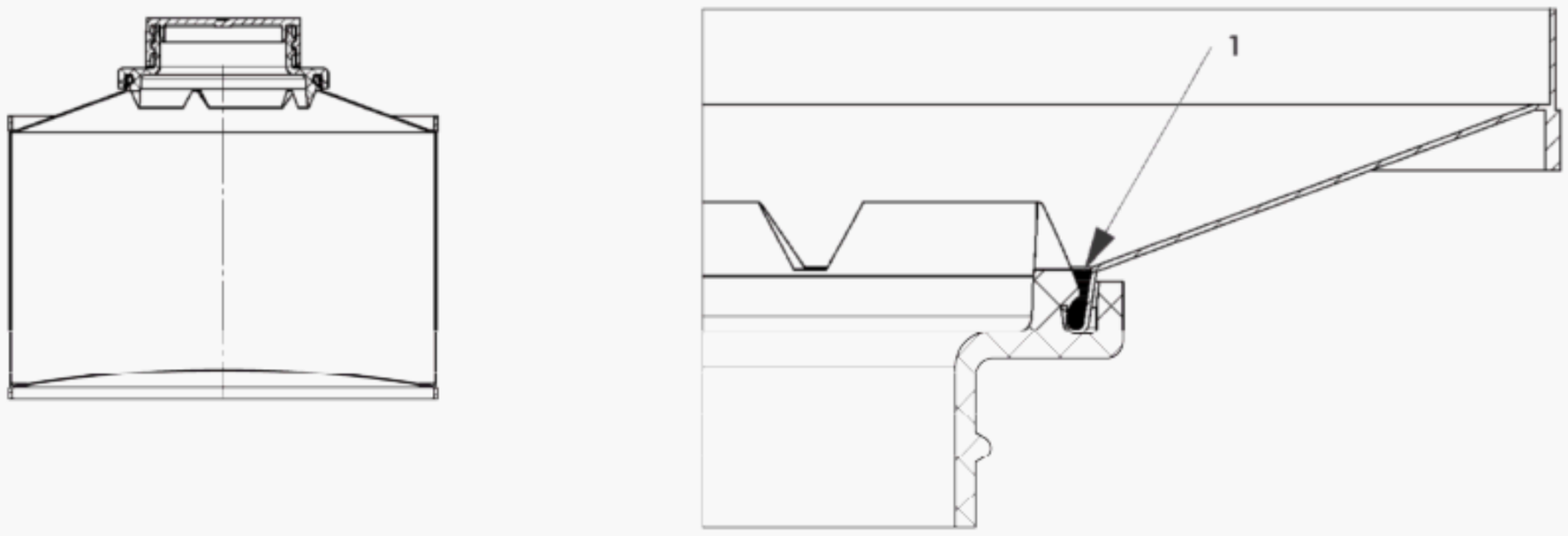

Key

1 Remaining quantity

NOTE The figure on the right is a detail of the figure on the left, but inverted.

Figure 2 — Example of Type B closure

3 Dimensions

The dimensions of the aperture shall conform to Table 1 and Figures 3, 4 and 5 where:

— d_1 = Internal diameter;

— d_2 = External diameter;

— h_1 = Skirt depth;

— h_2 = Height;

— α = Skirt angle;

— R = Radius;

— s = Metal thickness.

NOTE It is recommended that 0,25 mm ≤ s ≤ 0,49 mm and the container material is of quality TH 245 to TS 435 according to EN 10202:2001.

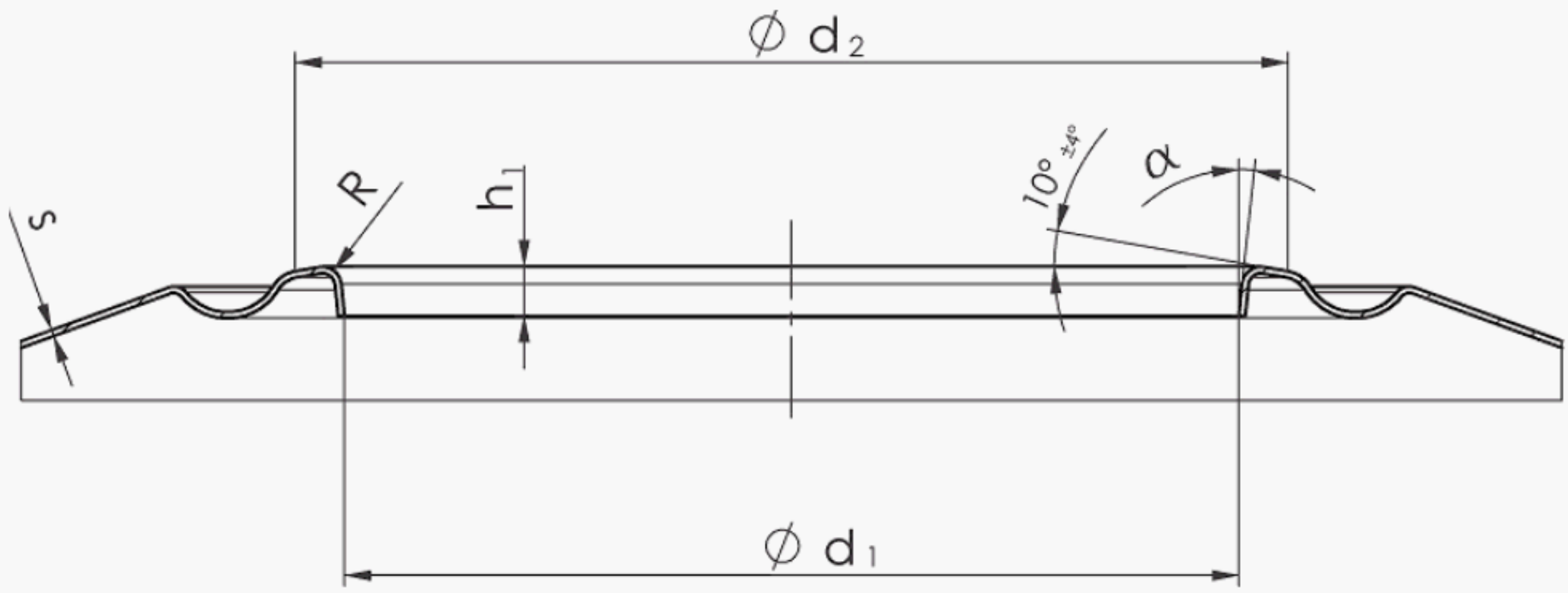

Figure 3 — Aperture for Type A closure

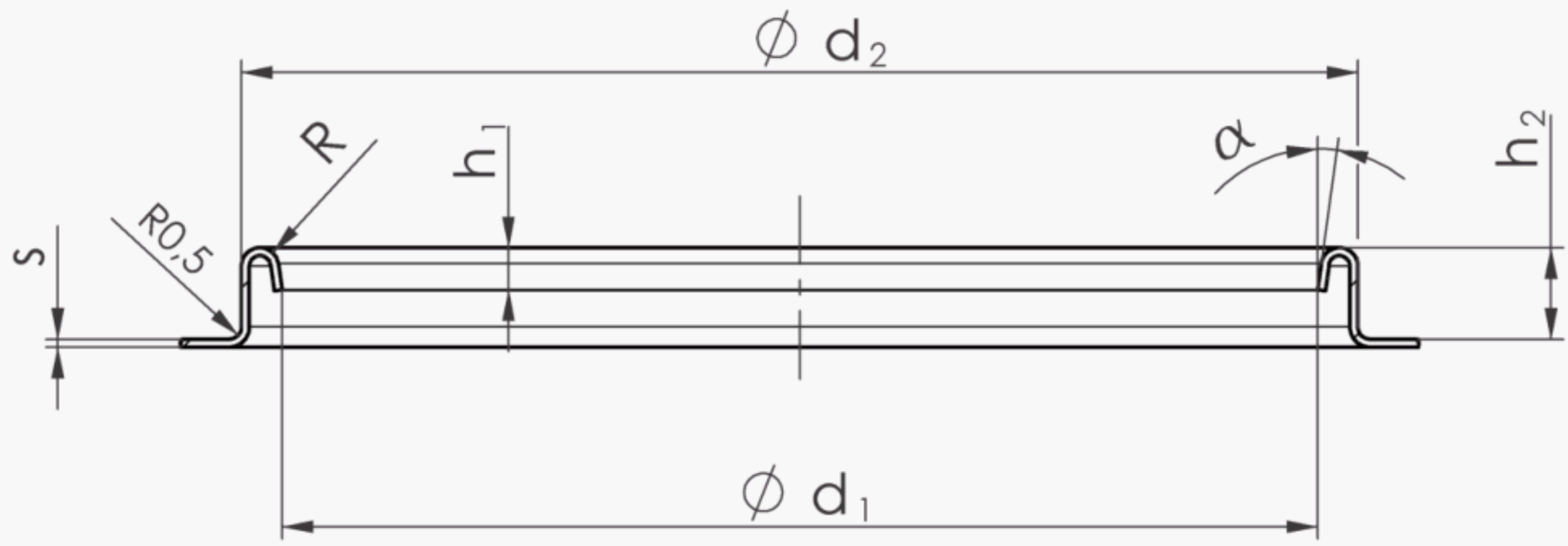

Figure 4 — Aperture for Type B closure – Non-stackable

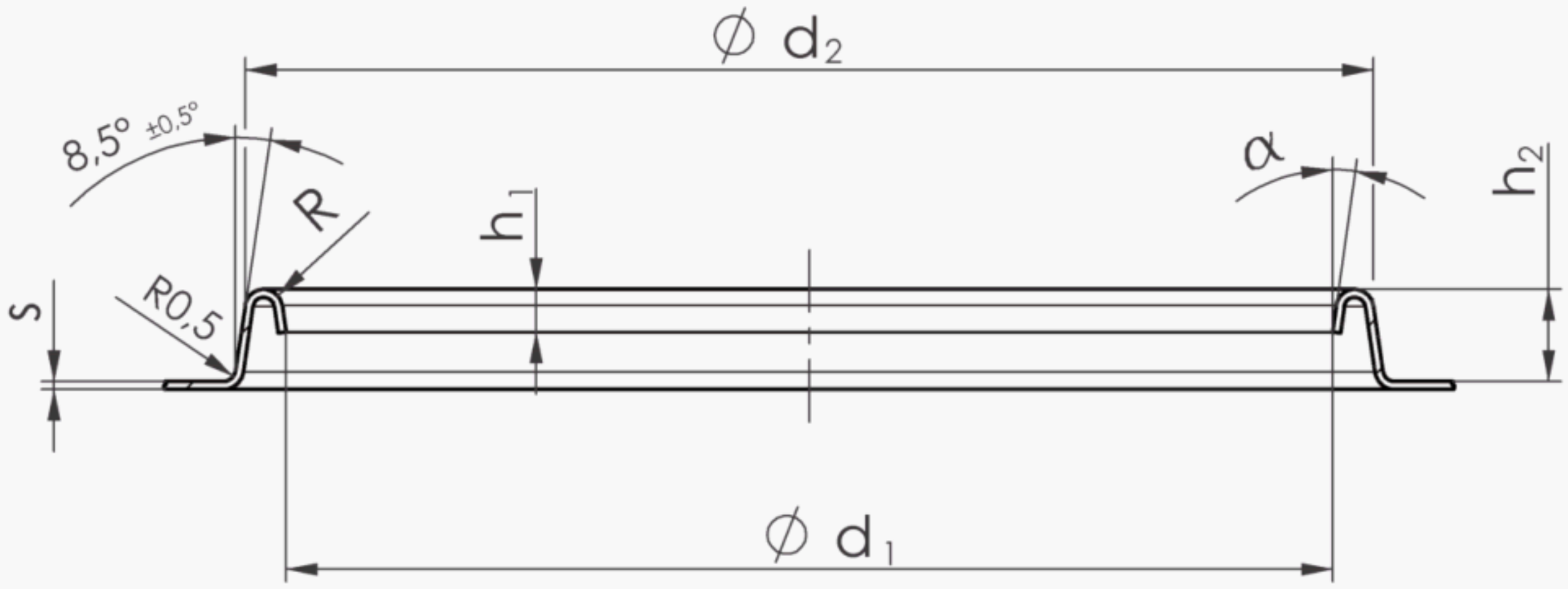

Figure 5 — Aperture for Type B closure – Stackable

Table 1 — Dimensions

Type	Nominal diameter mm	Internal diameter d_1 mm	Tolerance mm	External diameter d_2 mm	Tolerance mm	Skirt Depth h_1 mm	Tolerance mm	Height h_2 mm	Tolerance mm	Angle α^o °	Radius R mm	Tolerance mm
A	12	11,95	+0,00 -0,10	18,00	NS	1,70	+0,20 -0,00			NS	NS	NS
	24	23,85		30,00		1,75				NS	NS	
	27	26,58		34,00		1,90				NS	NS	
	32	31,85		40,00		1,75				NS	NS	
	42	42,30		51,00		2,20				NS	NS	
	57	56,90	+0,00 -0,20	71,00		2,40				NS	NS	
B	24	24,00	+010 -0,10	27,00	+0,20 -0,00	1,50	+0,00 -0,30	3,20	+0,50 -0,00	7	0,75	+0,00 -0,05
	32	32,00		35,00		1,50		3,20	+0,50 -0,00	7	0,75	
	42	42,00		45,10		1,70		3,70	+0,50 -0,00	8	0,75	
	57	57,00		61,80		2,50		4,70	+0,50 -0,00	7	1,15	

NS Not specified.

NOTE The values given of the external diameter for Type A are minimum values and the container should be flat within the diameter d_2, because this area is needed for the plastic closure.

Bibliography

[1] EN 10202:2001, *Cold reduced tinmill products – Electrlolytic tinplate and electrolytic chromium/chromium oxide coated steel*

[2] EN 13025-1, *Packaging – Light-gauge metal containers – Part 1: Nominal filling volumes for round, cylindrical and tapered general use metal containers up to 40 000 ml*

[3] EN 13026, *Packaging – Light-gauge metal packaging – Nominal filling volumes for non round, cylindrical and tapered general use metal containers up to 30 000 ml*

[4] EN ISO 90-2, *Light gauge metal containers – Definitions and determination of dimensions and capacities – Part 2: General use containers (ISO 90-2:1997)*