BRITISH STANDARD

BS EN ISO 10580:2012

Resilient, textile and laminate floor coverings — Test method for volatile organic compound (VOC) emissions

ICS 59.080.60; 97.150

NO COPYING WITHOUT BSI PERMISSION EXCEPT AS PERMITTED BY COPYRIGHT LAW

British Standards

EUROPEAN STANDARD

NORME EUROPÉENNE

EUROPÄISCHE NORM

EN ISO 10580

February 2012

ICS 59.080.60; 97.150

English Version

Resilient, textile and laminate floor coverings - Test method for volatile organic compound (VOC) emissions (ISO 10580:2010)

Revêtements de sol résilients, textiles ou stratifiés - Méthode d'essai des émissions de composés organiques volatils (COV) (ISO 10580:2010)

Elastische, textile und Laminat-Bodenbeläge - Prüfverfahren für die Emissionen flüchtiger organischer Verbindungen (VOC) (ISO 10580:2010)

This European Standard was approved by CEN on 31 December 2011.

CEN members are bound to comply with the CEN/CENELEC Internal Regulations which stipulate the conditions for giving this European Standard the status of a national standard without any alteration. Up-to-date lists and bibliographical references concerning such national standards may be obtained on application to the CEN-CENELEC Management Centre or to any CEN member.

This European Standard exists in three official versions (English, French, German). A version in any other language made by translation under the responsibility of a CEN member into its own language and notified to the CEN-CENELEC Management Centre has the same status as the official versions.

CEN members are the national standards bodies of Austria, Belgium, Bulgaria, Croatia, Cyprus, Czech Republic, Denmark, Estonia, Finland, France, Germany, Greece, Hungary, Iceland, Ireland, Italy, Latvia, Lithuania, Luxembourg, Malta, Netherlands, Norway, Poland, Portugal, Romania, Slovakia, Slovenia, Spain, Sweden, Switzerland, Turkey and United Kingdom.

EUROPEAN COMMITTEE FOR STANDARDIZATION
COMITÉ EUROPÉEN DE NORMALISATION
EUROPÄISCHES KOMITEE FÜR NORMUNG

Management Centre: Avenue Marnix 17, B-1000 Brussels

© 2012 CEN All rights of exploitation in any form and by any means reserved worldwide for CEN national Members.

Ref. No. EN ISO 10580:2012: E

Foreword

The text of ISO 10580:2010 has been prepared by Technical Committee ISO/TC 219 "Floor coverings" of the International Organization for Standardization (ISO) and has been taken over as EN ISO 10580:2012 by Technical Committee CEN/TC 134 "Resilient, textile and laminate floor coverings" the secretariat of which is held by BSI.

This European Standard shall be given the status of a national standard, either by publication of an identical text or by endorsement, at the latest by August 2012, and conflicting national standards shall be withdrawn at the latest by August 2012.

Attention is drawn to the possibility that some of the elements of this document may be the subject of patent rights. CEN [and/or CENELEC] shall not be held responsible for identifying any or all such patent rights.

According to the CEN/CENELEC Internal Regulations, the national standards organizations of the following countries are bound to implement this European Standard: Austria, Belgium, Bulgaria, Croatia, Cyprus, Czech Republic, Denmark, Estonia, Finland, France, Germany, Greece, Hungary, Iceland, Ireland, Italy, Latvia, Lithuania, Luxembourg, Malta, Netherlands, Norway, Poland, Portugal, Romania, Slovakia, Slovenia, Spain, Sweden, Switzerland, Turkey and the United Kingdom.

Endorsement notice

The text of ISO 10580:2010 has been approved by CEN as a EN ISO 10580:2012 without any modification.

© ISO 2011

Contents

Page

Foreword v
Introduction vi
1 Scope 1
2 Normative references 1
3 Terms and definitions 2
4 Symbols and abbreviated terms 4
5 Apparatus 4
6 Sampling the product and transport and storage of sample 4
6.1 Sampling 4
6.2 Sample packaging and transport 5
6.3 Sample description 5
6.4 Storage of the sample prior to starting the testing 6
7 Preparation of test specimens 6
7.1 Specimens from rolls 6
7.2 Samples of rigid products such as tiles and planks 6
8 Emission test chamber system 7
8.1 General 7
8.2 Emission test chamber description 7
8.3 Air supply and mixing facilities 7
8.4 Airtightness 7
8.5 Air sampling manifold 7
8.6 Recovery and sink effects 8
9 Test conditions 8
9.1 Temperature and relative air humidity 8
9.2 Temperature and relative-air-humidity control systems 8
9.3 Supply-air quality and background concentration 9
9.4 Air velocity 9
9.5 Loading factor and air change rate 9
9.6 Air change rate in the emission test chamber 9
9.7 Emission test chamber airtightness 9
9.8 Efficiency of the internal emission-test-chamber air mixing 9
10 Preparation of emission test chamber 10
11 Test procedure 10
11.1 Test conditions in the emission test chamber 10
11.2 Background concentrations 10
11.3 Test specimen location in the emission test chamber 10
11.4 Time for measurements of test-chamber air concentration 10
11.5 Air sampling 10
12 Analysis of the air samples 12
12.1 Analysis of VOC 12
12.2 Analysis of formaldehyde and carbonyl compounds 12
13 Calculation of vapour concentrations and area-specific emission rates 12
14 Performance characteristics 12
15 Test report 13

Annex A (informative) **General description of an emission test chamber** 14
Annex B (informative) **Evaluation systems** 15
Bibliography 20

© ISO 2011

Downloaded copy: University of Manchester Library. The University of Manchester Library, 2013-09-09

Foreword

ISO (the International Organization for Standardization) is a worldwide federation of national standards bodies (ISO member bodies). The work of preparing International Standards is normally carried out through ISO technical committees. Each member body interested in a subject for which a technical committee has been established has the right to be represented on that committee. International organizations, governmental and non-governmental, in liaison with ISO, also take part in the work. ISO collaborates closely with the International Electrotechnical Commission (IEC) on all matters of electrotechnical standardization.

International Standards are drafted in accordance with the rules given in the ISO/IEC Directives, Part 2.

The main task of technical committees is to prepare International Standards. Draft International Standards adopted by the technical committees are circulated to the member bodies for voting. Publication as an International Standard requires approval by at least 75 % of the member bodies casting a vote.

Attention is drawn to the possibility that some of the elements of this document may be the subject of patent rights. ISO shall not be held responsible for identifying any or all such patent rights.

ISO 10580 was prepared by Technical Committee ISO/TC 219, *Floor coverings*.

Introduction

The health and comfort of the occupants of indoor spaces are influenced by the indoor climate that exists in a room (in particular, ventilation, temperature and relative humidity) and by potential indoor air pollutants. Such pollutants may have a variety of sources. International bodies have already dealt with the assessment of VOC emissions from building products. The results of their work have been published in reports, which contain sufficiently detailed information to be considered as "pre-normative" documents. The main purpose of this International Standard is to give guidance to those organizations that protect consumers from exposure to chemical pollutants (i.e. carcinogens, teratogens, irritants, odours) and resulting adverse health effects which could be caused by chemical emissions from materials. This protection can be effectively achieved by supporting the market demand for low-emitting flooring materials. In response to the need for improved consumer protection, different kinds of systems for evaluating material emissions have been developed in many countries and by industrial organizations.

This International Standard refers to existing international test methods related to VOC emissions from textile, resilient and laminate floor coverings.

Please be aware that some countries have legal regulations and requirements for emissions of VOC and formaldehyde based on mandatory test methods other than this method. The test method for VOC and formaldehyde described in this International Standard offers an alternative, but is not intended to replace existing legislative test methods.

© ISO 2011

Resilient, textile and laminate floor coverings — Test method for volatile organic compound (VOC) emissions

1 Scope

This International Standard specifies a general laboratory test method for determination of the area-specific emission rate of volatile organic compounds (VOC) and/or the vapour-phase VOC concentration under defined climate conditions.

This International Standard describes emission test chambers used for the determination of the emission of volatile organic compounds from resilient, textile and laminate floor coverings.

A description of an emission test chamber is given in Annex A. Annex B provides details of the evaluation systems used in Europe and North America, respectively.

Studies of the emission of volatile organic compounds from unused (pre-installation) floor covering products in test chambers require proper handling of the product prior to testing, and during the testing period. For each type of floor covering product, specifications are given for the sampling procedures, transport conditions and storage parameters that can affect emissions of volatile organic compounds. For each type of floor covering product, the preparation of a test specimen is prescribed.

NOTE Depending on the non-homogeneity of the product, it can be necessary to make measurements on multiple test specimens from the same sample in order to determine the specific emission rate.

2 Normative references

The following referenced documents are indispensable for the application of this document. For dated references, only the edition cited applies. For undated references, the latest edition of the referenced document (including any amendments) applies.

ISO 16000-3, *Indoor air — Part 3: Determination of formaldehyde and other carbonyl compounds — Active sampling method*

ISO 16000-6:2004, *Indoor air — Part 6: Determination of volatile organic compounds in indoor and test chamber air by active sampling on Tenax TA sorbent, thermal desorption and gas chromatography using MS/FID*

ISO 16000-9:2006, *Indoor air — Part 9: Determination of the emission of volatile organic compounds from building products and furnishing — Emission test chamber method*

ISO 16000-11:2006, *Indoor air — Part 11: Determination of the emission of volatile organic compounds from building products and furnishing — Sampling, storage of samples and preparation of test specimens*

ISO 16017-1:2000, *Indoor, ambient and workplace air — Sampling and analysis of volatile organic compounds by sorbent tube/thermal desorption/capillary gas chromatography — Part 1: Pumped sampling*

ASTM D5197, *Standard Test Method for Determination of Formaldehyde and Other Carbonyl Compounds in Air (Active Sampler Methodology)*

© ISO 2011

3 Terms and definitions

For the purposes of this document, the following terms and definitions (as presented in ISO 16000-9 and ISO 16000-11) apply.

3.1
air change rate
ratio of the volume of clean air brought into the emission test chamber per hour to the free emission test chamber volume measured in identical units

3.2
air flow rate
air volume entering into the emission test chamber per time

3.3
air velocity
air speed over the surface of the test specimen

3.4
area-specific air flow rate
ratio between the supply-air flow rate and the area of the test specimen

3.5
emission test chamber
enclosure with controlled operational parameters for the determination of volatile organic compounds emitted from floor coverings

3.6
emission test chamber concentration
concentration of a specific volatile organic compound, VOC_i, (or group of volatile organic compounds) measured in the emission test chamber outlet

3.7
product loading factor
ratio of exposed surface area of the test specimen and the free emission test chamber volume

3.8
recovery
measured mass of a target volatile organic compound in the air leaving the emission test chamber during a given time period divided by the mass of target volatile organic compound added to the emission test chamber in the same time period

NOTE 1 The recovery is expressed in percent.

NOTE 2 The recovery provides information about the performance of the entire method.

3.9
sample
part or piece of a floor covering that is representative of the product

3.10
area-specific emission rate
SERa
mass of a volatile organic compound emitted from a unit area of product per unit time at a given time from the start of the test

NOTE 1 The area-specific emission rate is expressed in micrograms per square metre and hour ($\mu g/m^2h$).

NOTE 2 The term "area-specific emission rate" is sometimes used in parallel with the term "emission factor".

© ISO 2011

3.11
test specimen
part of the sample specially prepared for emission testing in an emission test chamber in order to simulate the emission behaviour of the material or product that is tested

3.12
volatile organic compound
VOC
compound, as specified in ISO 16000-6, which elute between and including *n*-hexane and *n*-hexadecane (excluding formaldehyde) on a non-polar capillary chromatographic column, measured in the test chamber air by active sampling on Tenax TA sorbent, thermal desorption (TD) and gas chromatography (GC) using mass spectrometry (MS) or flame ionization detection (FID)

3.13
total volatile organic compound
TVOC
sum of the concentrations of identified and unidentified volatile organic compounds eluting between and including *n*-hexane and *n*-hexadecane on a non-polar capillary gas chromatography column

NOTE 1 For quantification of the identified compounds, their individual response is used. The areas of the unidentified peaks are converted on molecular mass basis to concentrations using the toluene response factor (Reference [2] in the Bibliography).

NOTE 2 Due to practical reasons to be taken into account for test chambers, this definition differs slightly from the specification in ISO 16000-6:2004. In ISO 16000-6, TVOC are related to the sampling medium Tenax TA®[1)] on which the TVOC are adsorbed.

NOTE 3 The emission test method described in this International Standard is optimum for the range of compounds specified by the definition of total volatile organic compounds (TVOC).

3.14
carbonyl compounds
low-molecular-mass aldehyde and ketone volatile organic compounds which are measured in the test chamber air by active sampling on cartridges containing a solid support coated with an acid solution of 2,4-dinitrophenylhydrazine (DNPH) as a derivatizing reagent

3.15
mass concentration
C_i
ratio of mass of VOC_i per volume in the emission test chamber

NOTE Mass concentration is expressed in micrograms per cubic metre.

3.16
detection limit
minimum quantity which can be detected analytically with this test method

NOTE A detection limit of 2 µg/m^3 is defined for use in this International Standard.

3.17
determination limit
minimum quantity of a detected substance above which quantification is possible

NOTE Due to technical restriction of the apparatus and the accuracy of the test method, a determination limit of 10 µg/m^3 is defined for use in this International Standard.

---

1) Tenax TA® is the trade name of a product manufactured by Enka Research Institute NV (NL) and Buchem BV (NL). This information is given for the convenience of users of this document and does not constitute an endorsement by ISO of the product named. Equivalent products may be used if they can be shown to lead to the same results.

4 Symbols and abbreviated terms

For the purposes of this document, the following symbols and abbreviated terms apply.

Symbol	Meaning	Unit
C_i	mass concentration of a VOC_i in the emission test chamber	micrograms per cubic metre
L	product loading factor	square metres per cubic metre
n	air change rate	changes per hour
q	area-specific air flow rate (= n/L)	cubic metres per square metre and hour
SERa	area-specific emission rate	micrograms per square metre and hour
t	time after start of the test	hours or days

5 Apparatus

The equipment necessary for carrying out an emission test next to ordinary laboratory apparatus is listed below.

5.1 Emission test chamber system

5.1.1 Clean-air supply, e.g. pressurized purified air or synthetic air in gas cylinders.

5.1.2 Humidification system.

5.1.3 Air humidity, temperature and air velocity monitoring systems meeting the following accuracy: temperature ±1,0 °C, relative humidity ±3 %, air flow rate ±3 %.

5.1.4 Equipment for measurement of air mixing.

5.1.5 Thermal desorption apparatus.

5.1.6 Cleaning agent, for the emission test chamber walls or equipment for thermal desorption.

5.1.7 Gas chromatographic system, fitted with a flame ionization detector and/or mass spectrometric detector.

5.2 Sorbent tube. Use a 6,4 mm or 6,0 mm outer diameter (OD) stainless-steel (5 mm inner diameter, ID) or glass (4 mm ID) tube packed with at least 200 mg of Tenax TA (mesh size between 30 and 80 mesh) such that the sorbent bed length is at least 40 mm.

NOTE Tenax TA is a relatively weak sorbent. Its specification in ISO 16000-6 and in this International Standard assumes that the most volatile compound of interest is *n*-hexane. However, if a user of this International Standard is following an emission test protocol that calls for analysis of more volatile compounds and/or volatile polar compounds, stronger sorbents will be needed in the vapour sampling tube. Consult ISO 16017-1 for guidance on sorbent selection in this case.

6 Sampling the product and transport and storage of sample

6.1 Sampling

6.1.1 Selection of samples from rolls

See Figure 1.

© ISO 2011

Dimensions in metres

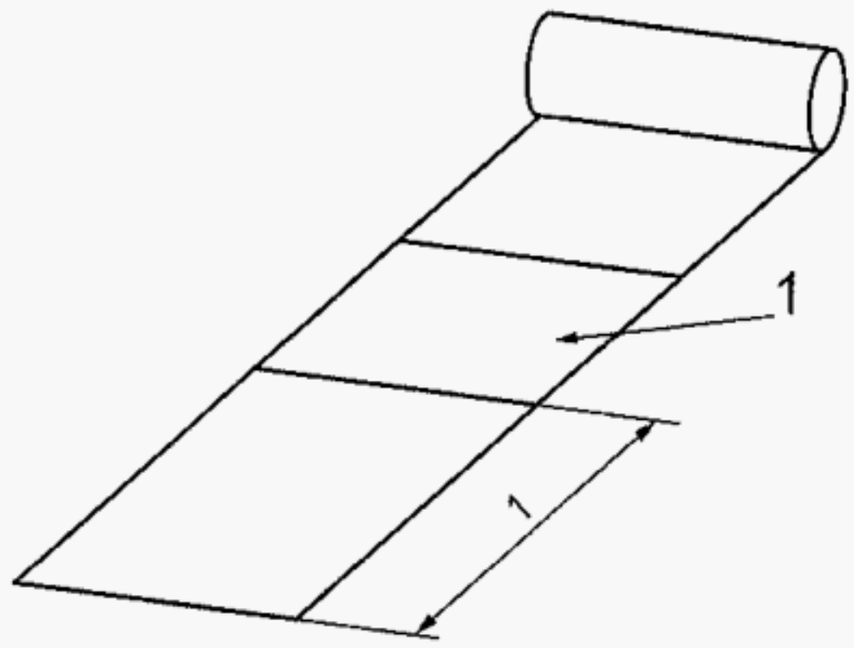

Key

1 sample

Figure 1 — Procedure for sampling products from rolls

Discard the outer layer of the roll to take the sample.

The sample shall have an area corresponding to at least 50 cm in the production direction over the width of the produced roll.

After taking the sample, it is rolled immediately at right angles to the direction of the production roll, secured with staples or a non-emitting fastening, wrapped in aluminium foil, and placed in an unprinted, airtight polyethylene bag and sealed. Each bag shall contain only one sample.

The packed samples shall be sent to the testing laboratory with the shortest possible delay.

6.1.2 Selection of samples of rigid products such as tiles and planks

Select an unopened and undamaged standard package of the product. Alternatively, remove four or more pieces from the centre of a product package leaving the outer pieces. Stack a minimum of four pieces and tightly wrap the stack in two layers of aluminium foil and treat as described for rolls in 6.1.1.

6.2 Sample packaging and transport

Samples shall be thoroughly protected from chemical contamination, such as fuel vapours or any physical exposure, e.g. heat, light and humidity during transportation and storage prior to testing.

This can be achieved by wrapping each sample or package of samples in aluminium foil and in a sealed polyethylene bag or, alternatively, in aluminized packaging lined with polyethylene or clear polyvinyl fluoride film. Each bag shall contain only one sample.

NOTE The transportation of collected samples can affect the emission characteristics of the product. The possible effects of temperature and humidity are of particular concern.

6.3 Sample description

The outer packaging of the sample shall be labelled with the details of the type of product, date or week of manufacture (if known) and/or any identification numbers, e.g. batch numbers (see also ISO 16000-9).

6.4 Storage of the sample prior to starting the testing

In many cases, it can be necessary to store the sample in the laboratory before starting the test. The sample shall be kept in its package, see 6.2, and stored at normal indoor conditions during any period of storage. Storage may affect the emission properties due to aging of the sample. It is recommended to minimize the storage time of the sample prior to preparation of the test specimen.

7 Preparation of test specimens

The period of time between the unpacking and preparation of the test specimen shall be as short as possible and shall be recorded. After preparation of the test specimen, it shall immediately be put in the emission test chamber. This time shall be regarded as the starting time of the emission test, i.e. $t = t_0$. For resilient, textile and laminate floor coverings, there is no extra conditioning time as the installed product is immediately accessible to the consumer.

7.1 Specimens from rolls

Unpack the sample and select an appropriate area of the product from the middle, if possible, at least 50 cm from the edge of the short side, and take a test specimen. Cut the specimen from the square, leaving, if possible, at least 5 cm from the edge on each side.

The underside of the test specimen shall be placed on an inert stainless-steel plate in order to determine exclusively the emission of the upper surface. Seal the edges with a non-emitting/non-absorbing aluminium foil (to be checked before use) or stainless-steel frame.

7.2 Samples of rigid products such as tiles and planks

Tiles and planks, etc. are taken from the middle of the package and assembled side by side (see Figure 2).

If the surface to be tested is composed of several pieces, such as laminated floor coverings or tiles, the joints in the test piece shall be proportionally distributed over the surface of the test specimen, i.e. the proportion of joint length to tile area shall be the same in the test specimen as in the finished floor. No adhesive is used in the joints. As an example, when laminate flooring is to be tested, at least two panels are taken from the middle of the package and the tongue and the groove are assembled together without using an adhesive.

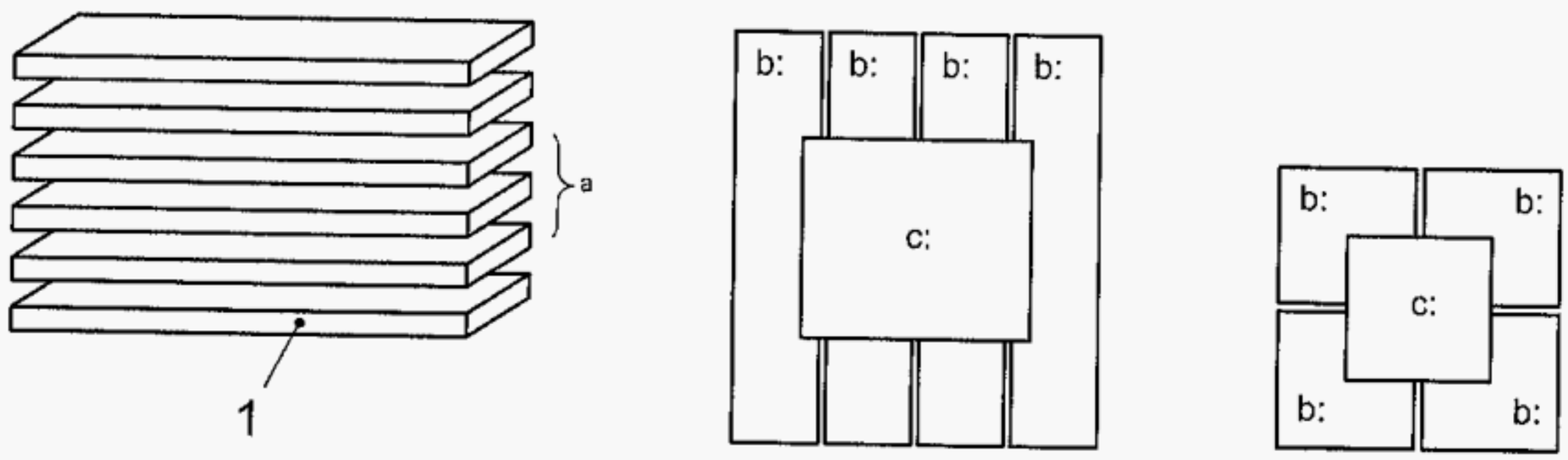

Key

1 package of tiles or planks

b: sample prepared from individual tiles or planks

c: test specimen

a Take sample tiles/planks.

Figure 2 — Specimen from tiles or planks

© ISO 2011

The underside of the test specimen shall be placed on an inert stainless-steel plate in order to determine exclusively the emission of the upper surface. Seal the edges with a non-emitting/non-absorbing aluminium foil (to be checked before use) or stainless-steel frame.

8 Emission test chamber system

8.1 General

A facility designed and operated to determine area-specific emission rates for VOCs emitted from floor covering products shall contain the following: emission test chamber, clean-air generation and humidification system, air mixing system, and monitoring and control systems to ensure that the test is carried out according to specified conditions.

General specifications and requirements that apply to all types of emission test chambers are specified in ISO 16000-9.

A general description of an emission test chamber is given in Annex A.

8.2 Emission test chamber description

The emission test chamber and the parts of the sampling system coming into contact with the emitted VOCs are made of surface-treated (polished) stainless steel.

The chamber should be approximately cubic. The chamber volume shall be in the range 20 L to 1 000 L, most typically between 50 L and 250 L.

Other materials may be used for mixing devices, e.g. fans, and for sealing materials. These shall be low emitting and low adsorbing and shall be tested in the test chamber to confirm that they do not contribute to the emission-test-chamber background concentration.

8.3 Air supply and mixing facilities

The emission test chamber shall have facilities (e.g. electronic mass flow controller) capable of continuously controlling the air change rate at a fixed value with an accuracy of ±3 %.

The emission test chamber shall be designed to ensure proper mixing of the emission test chamber air. The requirements are given in 9.8.

NOTE Fans, multiport inlet and outlet diffusers, perforated floors and baffle plates are used to obtain adequate mixing.

8.4 Airtightness

The emission test chamber shall be airtight in order to avoid uncontrolled air exchange with external air.

The emission test chamber shall be operated slightly above atmospheric pressure to avoid influence from the laboratory atmosphere. The emission test chamber is considered to be sufficiently airtight if at least one of the following requirements is fulfilled:

— the air leakage is less than 0,5 % of the chamber volume per minute at an overpressure of 1 000 Pa;

— the air leakage is less than 5 % of the supply-airflow rate.

8.5 Air sampling manifold

The exhaust air (at the emission test chamber outlet) shall be used for sampling, although separate sampling ports in the emission test chamber can be used, provided that the air sampled is equivalent to the exhaust air.

The sampler manifold should directly enter the outlet air stream. If a duct shall be used, it shall be as short as possible and maintained at the same temperature as the emission test chamber.

The sum of sampling air flows shall be smaller than 80 % of the inlet air flow to the emission test chamber.

A multiport sampling manifold can be used to provide flexibility for duplicate air sampling. A mixing chamber between the emission test chamber and the manifold or between the air inlet and the emission test chamber could be included to permit addition and mixing of internal standard gases with the emission test chamber air stream.

The exhaust from the emission test chamber should be ducted into a fume hood, ensuring that any chemicals emitted from the test material are isolated from the laboratory environment.

8.6 Recovery and sink effects

The recovery of a target VOC can be determined using a VOC source of known specific emission rate in the emission test chamber. The concentrations generated shall be of similar magnitude to those expected during the emission tests of building products.

Recovery tests shall be performed in the test chamber using toluene and *n*-dodecane. Chamber concentrations shall be determined at 24 h or 72 h after the start of the test (i.e. the first mandatory measurement, see Annex B and 11.4). The mean recovery shall be greater than 80 % for toluene and *n*-dodecane. The results of the recovery test shall be reported (concentration expected versus concentration measured).

NOTE 1 Low recovery of hygroscopic VOCs can occur in humidified air.

NOTE 2 Sink effects, leaks or poor calibration can cause difficulties in meeting the minimum requirements. Sink and adsorption characteristics are very much dependent on the type of compound emitted. Additional recovery tests using target VOCs with different molecular mass and polarity can be used to increase understanding of these effects.

9 Test conditions

9.1 Temperature and relative air humidity

Products shall be tested at a temperature and relative air humidity (RH) of 23 °C and 50 % RH during the emission test. The tolerances are ±2 °C and ±5% RH.

Initial variance can be observed in the emission test chamber climate after opening the emission test chamber door and loading a test specimen. These variances should be recorded.

9.2 Temperature and relative-air-humidity control systems

A control of temperature can be carried out either by placing the emission test chamber within a location controlled to the required temperature or by maintaining the temperature within the emission test chamber. In the latter case, the emission-test-chamber walls shall be insulated effectively to avoid condensation of moisture on the interior walls of the emission test chamber.

A control of relative air humidity can be made by various systems of either external humidity control of the clean-air supply or internal humidity control of the air in the emission test chamber. In the latter case, precautions shall be taken to avoid condensation or spraying of water in the emission test chamber.

The temperature and relative air humidity shall be measured independently of the systems for controlling the temperature and air humidity.

© ISO 2011

9.3 Supply-air quality and background concentration

The TVOC background concentration shall be lower than 20 µg/m^3. The background concentration of any single target VOC and formaldehyde shall be lower than 2 µg/m^3.

The supplied air and water used for humidification shall not contain interfering VOCs.

9.4 Air velocity

While air velocity can affect emission rates for many sources, emissions from flooring materials are generally controlled by diffusion and air velocity is not a critical parameter. It is more important that complete mixing be achieved (see 8.3 and 9.8).

9.5 Loading factor and air change rate

A product loading factor of 0.4 m^2/m^3 shall be used, as this is representative of typical floor-covering-area to air-volume ratios in the indoor environment.

If product emissions are to be reported in terms of SERa, any air change rate between 0,5 h^{-1} and 1,0 h^{-1} can be applied to the chamber without affecting the result.

However, if the relevant test protocol requires VOC emission data to be quoted in terms of vapour concentration in the chamber air (i.e. in the air exhausting from the chamber), this will be affected by the air change rate. Given a constant loading factor of 0,4, vapour concentrations for a product tested using an air change rate of 1,0 h^{-1} will be half those reported for the same product tested using an air change rate of 0,5 h^{-1}. Therefore, the actual air change rate used shall be specified whenever emission results are reported in terms of vapour concentration in the chamber air. See 13.1 for the calculation of vapour concentration at different air change rates.

9.6 Air change rate in the emission test chamber

The air change rate shall be regularly checked with a minimum frequency of every 12 months, by using either a calibrated gas meter or the tracer gas procedure. The air change rate shall not vary by more than ±3 % of the set value.

If the test is carried out on the outlet with a gas volume meter/flow meter that is not permanently installed, one should be aware that the back pressure introduced by the instrument can lower the flow rate through the emission test chamber.

9.7 Emission test chamber airtightness

The emission test chamber airtightness shall be checked regularly, either by pressure drop measurements or by comparison of simultaneous measurement of flow rates at the inlet and the outlet ports; or by measuring tracer gas dilution.

9.8 Efficiency of the internal emission-test-chamber air mixing

Tests to determine the efficiency of the air mixing shall be conducted with test specimens or the inert substrate of the test specimens located in the test chamber.

One approach for determining if the test chamber air is adequately mixed is to blend a tracer gas with the inlet air at constant concentration and flow, and measure the concentration in the chamber outlet over time. The chamber concentration versus time plot is then compared to the theoretical curve for a completely mixed chamber. A procedure would be to adjust the theoretical curve by the least-squares fit to the measured data using the chamber volume as a variable. One can then compare the actual chamber volume to the "apparent" chamber volume based on the curve fit. The internal chamber air should be properly mixed and should comply with or within 10 % of the theoretical perfectly mixed model.

© ISO 2011

10 Preparation of emission test chamber

The emission test chamber shall be cleaned in order to fulfil the requirements of 8.2.

11 Test procedure

11.1 Test conditions in the emission test chamber

The temperature, relative air humidity and air flow rate shall be monitored and recorded continuously.

11.2 Background concentrations

An air sample (typically 5 L) of the emission-test-chamber background is taken before the start of a new emission test, to quantify any background contribution of volatile organic compounds from the empty emission test chamber and other apparatus.

Background concentrations shall meet the requirements in 9.3.

11.3 Test specimen location in the emission test chamber

The test specimen shall be positioned horizontally in the centre of the floor of the emission test chamber to ensure that the air flow is evenly distributed over the emitting surface of the test specimen.

11.4 Time for measurements of test-chamber air concentration

The concentration measurements shall be carried out at air sampling times defined by the different evaluation protocols. Depending on the objective of the test, it can be appropriate to sample the air at additional times. The air sampling duration for concentration measurements depends on the analytical methods to be used and they shall be documented.

Duplicate air samples shall be collected at intervals required by the testing protocol.

After termination of the emission test, the emission test chamber shall be cleaned.

The emission test duration is determined by the purpose of the test. Usually, the specimen is kept in the chamber for the duration of the longest time interval described in the test protocol. If for a period the test specimen is not in the chamber, it shall be stored at an average temperature of 23 °C and a relative air humidity of 50 % RH. During this storage, the aging process of the test specimen shall be similar to that occurring in the test chamber. Any contamination by other stored test specimens has to be avoided. The test specimen shall then be re-introduced into the test chamber at least 72 h prior to air sampling. Each removal of the test specimen has to be documented in the test protocol.

NOTE 1 If decay studies are required, air samples can be taken after 1, 3, 7, 14, 28 and 56 days, or longer, after the start of the test.

Background concentrations of VOCs should be sufficiently controlled in order to avoid contamination of test specimens.

NOTE 2 To minimize contamination of test specimens, well-ventilated shelves or storage cabinets can be used.

11.5 Air sampling

11.5.1 Sampling vapour-phase VOC

The vapour sampling shall be done in accordance with ISO 16000-6.

© ISO 2011

11.5.1.1 Conditioning and storage of the sorbent tube prior to vapour sampling

Follow the manufacturer's guidance for conditioning the sorbent tube prior to vapour sampling such that, when the blank tube is analysed, no individual interfering VOC artefact levels exceed 2 ng and TVOC levels do not exceed 20 ng after subtraction of non-interfering VOC artefacts. Conditioned tubes shall be sealed using long-term storage caps (for example, two-piece screw-type metal fittings with combined PTFE ferrules as specified in ISO 16017-1) which prevent ingress of VOC artefacts from ambient air. Conditioned sorbent tubes should be stored in as clean an environment as possible and should be used for vapour sampling within one month. Conditioned tubes do not require refrigerated storage.

NOTE Tube conditioning normally requires more stringent temperature and gas flow parameters than will be used during subsequent analysis of the sampled tubes, but care must be taken not to exceed 340 °C, which is close to the maximum for Tenax TA sorbent.

11.5.1.2 Vapour sampling onto conditioned sorbent tubes

Ensure that the sorbent tubes are adequately conditioned before use. To prevent condensation of water inside the sorbent tubes during vapour sampling, also ensure that they are allowed time to equilibrate to chamber air temperature, if required, before being uncapped and used for vapour sampling.

Uncap conditioned tubes and attach the sampling end of the sorbent tube to the emission test chamber. Attach the other end of the sorbent tube to the pump assembly. Select a pump assembly complying with ISO 16000-6. Follow the manufacturer's guidelines and the specifications in ISO 16000-6 with respect to attaching the sorbent tubes to the exhaust of the emissions test chamber and pump, but in all cases, connections should comprise inert (non-emitting/non-absorbing) materials and should be made as quickly as possible in order to minimize diffusive ingress of vapours from the ambient air.

Vapour sampling should be carried out at an appropriate flow rate (typically 20 ml/min to 200 ml/min; see ISO 16017-1 and other related standards). Sample a maximum of 5 L of chamber air to minimize breakthrough of the most volatile compounds of interest, such as *n*-hexane (see ISO 16000-6:2004, Annex B).

After vapour sampling, disconnect the sorbent tube from the chamber and pump assembly and reseal immediately with long-term storage caps.

NOTE If more volatile and/or volatile polar compounds are of interest, it might be necessary to select a stronger sorbent or to use a tube packed with more than one sorbent in series; see ISO 16017-1 for more information.

To optimize sensitivity, users are recommended to sample the full, 5 L (maximum) air volume when checking chamber background levels and when monitoring low-level (trace) emissions.

11.5.1.3 Storage of the sorbent tubes between vapour sampling and TD-GC-MS (FID) analysis

Extensive studies carried out by CEN and other institutes have shown that Tenax tubes, loaded with stable VOCs, may be stored for many months at ambient temperature without any impact on analytical data, provided that the tubes are sealed using appropriate long-term storage caps (see ISO 16000-6:2004, Annex C). However, for the purposes of this International Standard, sampled tubes shall be kept in a low VOC environment and analysed within 30 days to optimize recovery of less stable chemicals.

Refrigerated storage is not usually required or advised for sampled tubes, but if preliminary emissions-screening tests show the presence of particularly reactive analytes, refrigerated storage can be used. If refrigerated storage is used, tube seals must be retightened once the sorbent tubes have equilibrated at a minimum storage temperature. Sorbent tubes must also be allowed to re-equilibrate with ambient temperature before being uncapped for analysis.

11.5.2 Sampling formaldehyde and carbonyl compounds

Sampling media for formaldehyde and other low-molecular-mass carbonyls consist of cartridges containing a solid support coated with an acid solution of 2,4-dinitrophenylhydrazine (DNPH) as a derivatizing reagent in accordance with ISO 16000-3.

12 Analysis of the air samples

12.1 Analysis of VOC

The analyses of VOC shall be done in accordance with ISO 16000-6.

12.2 Analysis of formaldehyde and carbonyl compounds

The analyses of formaldehyde and carbonyl compounds shall be done in accordance with ISO 16000-3.

13 Calculation of vapour concentrations and area-specific emission rates

With respect to analytical system calibration and calculation of emission test results, the specifications either in ISO 16000-6 or in the relevant emissions test protocol shall be followed.

Emissions data (for individual and/or total VOCs), reported in terms of area-specific emission rates (SERa), are independent of the air change rate (and associated surface air velocity). In other words, area-specific emission rate data will remain constant for multiple tests on a given flooring product, even if different chamber air change rate conditions are used during those tests. The area-specific emission rate (SERa) for VOC_i is calculated as:

$$\text{SERa} = C_i \left(\frac{n}{L} \right) = C_i q_{V/A}$$

where

C_i is the mass concentration, in micrograms per cubic metre, of a VOC_i in the emission test chamber;

n is the air change rate, in changes per hour;

L is the product loading factor, in square metres per cubic metre;

$q_{V/A}$ is the area-specific air flow rate, in cubic metres per square metre and hour.

However, if the relevant emissions test protocol requires emissions data to be reported in terms of vapour concentration in chamber air, this will be impacted by the air change rate used for the tests (see 9.5). Therefore, in this case, to allow comparison with emission data obtained for the same or similar products under different air change rate conditions, the actual air change rate used shall always be reported and taken into account.

The sum of emitted compounds, TVOC, should be regarded only as a factor specific to the product studied and only to be used for comparison of products with identical or very similar target VOC profiles.

14 Performance characteristics

Performance characteristics of this test method, when used in conjunction with ISO 16000-6, are specified in ISO 16000-6 and ISO 16017-1.

© ISO 2011

15 Test report

The test report shall contain at least the following information:

a) test laboratory:

   1) name and address of the laboratory;

   2) name of the responsible person;

   3) description of the equipment and methods used (test chamber, clean-air system, environmental control, sample collection, analytical instrumentation, standard generation and calibration);

b) sample description:

   1) type of product (and brand name if appropriate);

   2) sample selection process (e.g. random);

   3) product and sampling history (date of production, date and place of sampling, date of arrival at the test laboratory);

c) test specimen preparation:

   1) date and time of unpacking and test specimen preparation (hour, day, month and year);

   2) method of preparation, including thickness and substrate, including, for liquid products, the substrate, the amount per unit area and/or the thickness;

d) experimental conditions and procedures:

   1) chamber conditions (temperature, relative air humidity, air change rate, air velocity);

   2) test specimen area and loading ratio;

   3) sampling of emitted VOCs (adsorbent used, volume sampled, sampling duration and times after introduction into the chamber);

e) data analysis: describe the method used to derive specific emission rates from measured chamber concentrations (specify mathematical models or equations used);

f) results: when applicable, vapour concentrations, specific emission rates shall be reported for each test specimen, for individual VOCs and/or TVOC, at the times of air sampling;

g) quality assurance/quality control:

   1) background chamber concentrations of target compounds;

   2) recovery data of toluene and *n*-dodecane (to evaluate sinks);

   3) results of duplicate sampling/analysis;

   4) quality of the environmental variables (temperature, relative air humidity, air change rate, air velocity).

Annex A
(informative)

General description of an emission test chamber

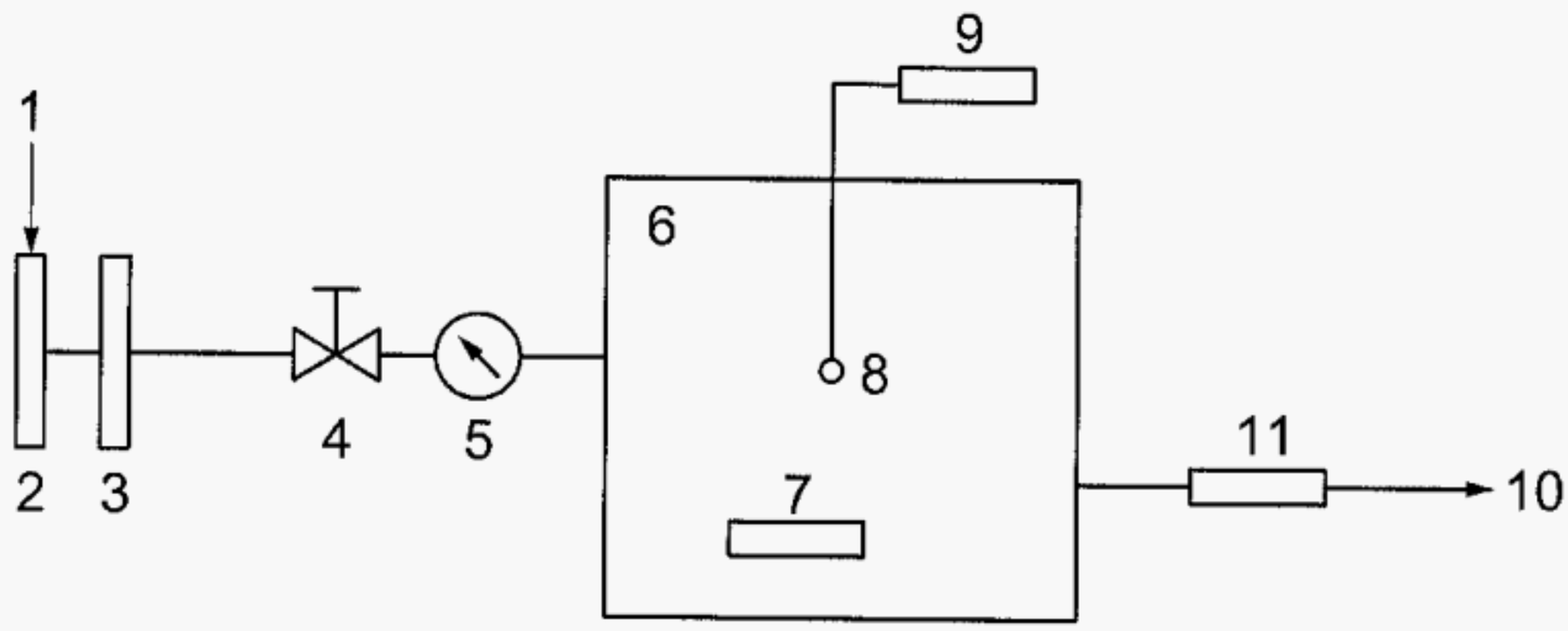

Key

1 air inlet
2 air filter
3 air conditioning system unit
4 air flow regulator
5 air flow meter
6 test chamber
7 device to circulate air and control air velocity
8 temperature, air humidity, and air velocity sensors
9 monitoring system for temperature and air humidity
10 exhaust outlet
11 manifold for air sampling

Figure A.1 — General description of an emission test chamber

© ISO 2011

Annex B
(informative)

Evaluation systems

B.1 Introduction

Using the test method described in this International Standard, one can measure with one single test the emission of volatile organic compounds (VOCs) at different time intervals satisfying the requirements in the different evaluation standards mentioned in this annex.

B.2 Evaluation system for Europe

The evaluation involves an evaluation procedure for determining the acceptability of VOC emissions from floor covering products, taking into account levels of TVOC and the risk factor R.

R is the risk index and is defined as:

$$R = \sum R_i$$

For the evaluation of each compound i, the ratio R_i is established as defined in the following equation:

$$R_i = C_i / C_L$$

for all C_i above the determination limit

where

C_L is the lowest concentration above which, according to best professional judgment, an organic compound might have an adverse effect on humans in an indoor environment;

C_i is the mass concentration of a VOC_i in the emission test chamber, in micrograms per cubic metre.

These values shall be used to assess the flooring product against the product requirements presented in Table B.1.

Table B.1 — Requirements

Characteristic	Requirements	Comments
After 3 days		
Any carcinogenic compound as defined in European Directive 76/769/EEC[a]	Not above determination limit	
$TVOC_3$	⩽ 10 000 µg/m³	
Cut-off criteria: If after 3 days all requirements as defined for 28 days are met, the test can be terminated as the requirements for 28 days shall be considered to be met.		
After 28 days		
$TVOC_{28}$	⩽ 1 000 µg/m³	
Any carcinogenic compound as defined in European Directive 76/769/EEC[a]	Not above determination limit	
R-value for all assessable compounds	⩽ 1	Rounded to the nearest whole number without dimension
[a] The list to be considered comprises the consolidated version of Annex 1 of European Directive 76/769/EEC, plus a consolidated list of "Carcinogens, Mutagens and Reprotoxins" (CMR) reference, http://ec.europa.eu/enterprise/sectors/chemicals/documents/reach/archives/market-restrictions/. This list is only to be considered for volatile organic compounds as defined in 3.12 of this International Standard.		

B.3 Evaluation system for North America

B.3.1 General

This annex describes an evaluation procedure for determining the acceptability of VOC emissions from floor covering products using chamber-derived area-specific emission rates in a mass balance model to estimate concentrations of target VOCs. The estimated exposure concentrations are compared to guidelines based on chronic non-cancer health effects.

B.3.2 Chemicals of concern and other target VOCs

B.3.2.1 Introduction

VOCs that are detected by the methods described in this International Standard are considered to be chemicals of concern if they appear on any of the lists of toxicants identified in this annex. Chemicals of concern include known or probable human carcinogens, reproductive/developmental toxins, and toxins with serious, non-cancer chronic effects. The most current agency list effective on the date the test is initiated shall be used to designate chemicals of concern.

The relevant agency lists of chemicals of concern are actively maintained by the State of California Environmental Protection Agency (Cal/EPA). Additions and revisions to these lists are peer-reviewed by panels of qualified experts and are open to public comment. The lists mirror similar programmes of the US Environmental Protection Agency (EPA), but generally are based on more recent toxicological data. Chemicals of concern shall be quantified by using pure compounds as standards.

B.3.2.2 Cal/EPA, Air Resources Board (ARB) list of Toxic Air Contaminants (TACs)

The current version of this list is accessible at http://www.arb.ca.gov/toxics/id/id.htm. The TAC list includes all substances on the EPA list of Hazardous Air Pollutants plus additional compounds. The list also contains substances not specifically identified as TACs, but for which one or more health values are under

© ISO 2011

development. Detectable VOCs appearing in any category of the TAC list are considered chemicals of concern.

B.3.2.3 Cal/EPA Office of Environmental Health Hazard Assessment (OEHHA) Safe Drinking Water and Toxic Enforcement Act of 1986 (commonly referred to as Proposition 65)

There are two components to the list: chemicals known to the State to cause cancer and chemicals known to the State to cause reproductive harm. The most recent list is accessible at http://oehha.ca.gov/prop65/prop65_list/newlist.html. Detectable VOCs appearing in either category of the Proposition 65 list are considered as chemicals of concern.

B.3.2.4 Cal/EPA OEHHA list of chemicals for which non-cancer chronic Reference Exposure Levels (RELs) have been established for inhalation exposures

Chronic RELs are air concentrations to which the general population, including sensitive individuals, may be exposed for long periods (≥ 10 years) without the likelihood of serious adverse systemic effects other than cancer. The most recent chronic REL list is accessible at http://www.oehha.ca.gov/air/chronic_rels/AllChrels.html. Generally, VOCs with chronic RELs also appear on the TAC list. There are a number of chemical substances with chronic RELs that are not VOCs (e.g. metals, inorganic acids and pesticides). This International Standard does not require the analysis of such non-VOC substances. The US Agency for Toxic Substances and Disease Registry conducts a programme following a similar methodology that develops exposure guidelines for non-cancer health effects and publishes Minimal Risk Levels for Hazardous Substances.

B.3.3 Indoor air quality concentration modelling

In addition to the $SERi_a$, the model utilizes inputs for the amount of installed product and the outdoor air flow rate derived as the product of an assumed air exchange rate, the nominal volume of the space, and a factor accounting for the fraction of the volume that is occupied by solid objects or not otherwise ventilated (ventilated volume fraction).

Steady state conditions with respect to emission rates are assumed in making the prediction. Additional assumptions are zero outdoor air concentrations, perfect mixing within the building, and no net losses of VOCs from air due to effects other than ventilation (e.g. chemical reactions and irreversible or net sorption onto surfaces).

This annex specifies a typical public/commercial private office (see Table B.2). Ventilation rates are conservatively estimated to be less than minimally required by building codes. Flooring products are assumed to cover the entire office floor. Thus, the product loading factor, L, in the building reduces to the inverse ceiling height (m^{-1}).

The estimated building concentration, c_{Bi}, in micrograms per cubic metre ($\mu g/m^3$), of a target VOC_i shall be calculated using Equation (B.1). The $SERa_i$ in micrograms per square metre and hour ($\mu g/m^2h$), determined at 96 h after placing the test specimen in the chamber (14 days total exposure time) is divided by the area-specific air flow rate, q_B, in cubic metres per square metre and hour (m^3/m^2h), for the product installed in the building.

$$c_{Bi} = \frac{SERa_i}{q_B} \tag{B.1}$$

with

$$q_B = n_B / L_B$$

where

n_B is the air exchange rate, in changes per hour (h^{-1}) × 0.9 (ventilated volume fraction);

L_B is the inverse ceiling height, in reciprocal metres (m^{-1}).

The area-specific air flow rate, q_B, for a floor covering product in the office is 1,85 m^3/m^2h.

Concentrations for the office scenario or both shall be estimated by Equation (B.1) for all chemicals of concern and other target VOCs as defined here.

Table B.2 — Dimensions and model parameters for a commercial private office

Parameter	Value	
	Unit	Office
Length	m	3,66
Width	m	3,05
Floor area	m^2	11,1
Floor covering area	m^2	11,1
Ceiling height	m	2,74
Volume	m^3	30,6
Loading ratio	m^{-1}	0,365
Air exchange rate	h^{-1}	0,75
Ventilated volume fraction		0,9
Outdoor air flow rate	m^3/h	20,7
Area-specific air flow rate	m^3/m^2h	1,85

B.3.4 Maximum allowable concentrations

Lowest concentrations of interest are herein established for individual chemicals of concern and for other individual target VOCs. It is assumed that there are likely multiple sources of individual VOCs in a building. Thus, for chemicals of concern, the maximum allowable concentration estimated for a model building scenario is limited to no more than one-half the lowest concentration of interest. The additional target VOCs for carpets have their own maximum allowable concentration requirements as described below.

Most of the lowest concentrations of interest are adopted directly from the chronic RELs developed by Cal/EPA OEHHA. Limit values from the most recent chronic REL list, accessible at http://www.oehha.ca.gov/air/chronic_rels/AllChrels.html, shall be used. As described, the use of the list is limited to only those VOCs that can be detected by the specified methods.

B.3.5 Formaldehyde and acetaldehyde

B.3.5.1 Sampling and analysis

The testing of floor covering products for emissions of VOCs shall also include measurements of formaldehyde and acetaldehyde emissions. Sampling and analysis of formaldehyde and acetaldehyde shall be based on ASTM D5197.

Samples for formaldehyde and acetaldehyde shall be collected from test chambers at the same average elapsed times as samples for VOCs are collected.

Formaldehyde and acetaldehyde samples shall be analysed by HPLC with a UV detector and an analytical column capable of full resolution of the formaldehyde hydrazone derivative from unreacted DNPH. Aldehyde hydrazone derivatives shall be identified by matching the chromatographic retention times of the unknown peaks to the retention times of derivatives of the pure compounds analysed using identical procedures. These derivatives shall be used to create multi-point calibrations with a minimum of four points required. At least one standard shall be analysed with each batch of samples. The lower limit of quantification for formaldehyde and acetaldehyde in chamber samples shall be 2 $\mu g/m^3$ or better.

© ISO 2011

B.3.5.2 Maximum allowable formaldehyde concentration

The chronic REL for formaldehyde is 9 µg/m^3. One-half this value is near a level commonly encountered in outdoor air. Cal/EPA ARB recommends a value of 33 µg/m^3 (27 parts per billion) as an upper limit for formaldehyde concentrations in residences: http://www.arb.ca.gov/research/indoor/formaldgl08-04.pdf and it is adopted here as the lowest concentration of interest. The formaldehyde concentration estimated for a model building scenario shall not exceed one-half this value (16,5 µg/m^3). This is equivalent to a maximum allowable emission factor of 30,5 µg/m^{2}h for the office scenario.

Table B.3 — Additional target VOCs to be included in initial tests of carpet products and maximum emission factors for the office scenario

Maximum air concentrations of these target VOCs for carpet products modelled from 14 day chamber test data.

Compound	CAS No.	Maximum model concentration µg/m^3	Emission factor µg/m^{2}h
Caprolactam	105-60-2	100	190
4-Phenylcyclohexene	4994-16-5	9,3	17

B.3.5.3 Safe exposure levels for carcinogens and reproductive toxicants

Cal/EPA OEHHA has developed Proposition 65 safe harbour levels consisting of no significant risk levels (NSRLs) for carcinogens and maximum allowable dose levels (MADLs) for chemicals that cause reproductive toxicity. The lists are updated regularly. The most current lists are available at http://www.oehha.ca.gov/prop65/getNSRLs.html. The NSRLs and MADLs are intended to assist manufacturers and other interested parties in determining whether warnings are required on products. Inhalation exposures of VOCs with carcinogenic or reproductive effects can be estimated over appropriate time periods. A daily intake level is calculated by dividing the predicted VOC concentration by an average daily breathing rate. Note that adherence to the procedure presented here does not necessarily mean that a product complies with the Proposition 65 warning requirements.

If a product emits a carcinogen or reproductive toxicant without an inhalation NSRL or MADL, a toxicological assessment may be required to determine the potential risk associated with these emissions.

© ISO 2011

Bibliography

[1] ISO 554:1976, *Standard atmospheres for conditioning and/or testing — Specifications*

[2] ECA (European Collaborative Action "Indoor Air Quality and its Impact on Man"). *Total Volatile Organic Compounds (TVOC) in Indoor Air Quality Investigations*. Report No. 19, EUR 17675 EN. Luxembourg: Official Publications of the European Communities, 1997

[3] ECA (European Collaborative Action "Indoor Air Quality and its Impact on Man"). *Guideline for the characterization of volatile organic compounds emitted from indoor materials and products using small emission test chambers*. Report No. 8, EUR 13593 EN. Luxembourg: Official Publications of the European Communities, 1991

[4] ECA (European Collaborative Action "Indoor Air Quality and its Impact on Man"). *Evaluation of VOC Emissions from Building Products — Solid Flooring Materials*. Report No. 18, EUR 17334 EN. Luxembourg: Official Publications of the European Communities, 1997

[5] TICHENOR, B.A. *Indoor air sources; using small environmental emission test chambers to characterize organic emissions from indoor materials and products*, EPA-600 8-89-074, Air and Energy Engineering Research Laboratory, U.S. Environmental Protection Agency, 1989. Section 2A

[6] TICHENOR, B.A. *Indoor air sources; using small environmental emission test chambers to characterize organic emissions from indoor materials and products*, EPA-600 8-89-074, Air and Energy Engineering Research Laboratory, U.S. Environmental Protection Agency, 1989. Section 5C

[7] TICHENOR, B.A. *Indoor air sources; using small environmental emission test chambers to characterize organic emissions from indoor materials and products*, EPA-600 8-89-074, Air and Energy Engineering Research Laboratory, U.S. Environmental Protection Agency, 1989. Section 6C

[8] ECA (European Collaborative Action "Indoor Air Quality and its Impact on Man"). *Formaldehyde emissions from wood based panels: guideline for the establishment of steady state concentrations in emission test chambers*. Report No. 2, EUR 12196 EN. Luxembourg: Official Publications of the European Communities, 1989

[9] TICHENOR, B.A. *Indoor air sources; using small environmental emission test chambers to characterize organic emissions from indoor materials and products*, EPA-600 8-89-074, Air and Energy Engineering Research Laboratory, U.S. Environmental Protection Agency, 1989. Section 7

[10] Danish Standard/INF 90, *Directions for the determination and evaluation of the emission from building products (Anvisning for bestemmelse og vurdering af afgasning fra byggevarer)*, Dansk Standard, Copenhagen, 1994

[11] Swedish industry protocol, *Measuring the emission characteristics of composite floor structures*, Swedish Flooring Association, http://www.golvbranschen.se

[12] ECA. *Evaluation of VOC Emissions from Building Materials*. Report No. 18, Commission of the European Communities, Luxembourg, 1997, 108 p.

[13] ASTM D5116-97, *Standard Guide for Small-Scale Environmental Chamber Determination of Organic Emissions from Indoor Materials/Products*

[14] California Department of Health Services, Division of Environmental and Occupational Disease Control, Environmental Health Laboratory Branch, Indoor Air Quality Section, *Standard Practice For The Testing Of Volatile Organic Emissions From Various Sources Using Small-Scale Environmental Chambers*, Sacramento, California, July 2004

© ISO 2011