BRITISH STANDARD

BS EN 14803:2006

Identification and/or determination of the quantity of waste

The European Standard EN 14803:2006 has the status of a British Standard

ICS 13.030.01

British Standards

Licensed copy: Lee Shau Kee Library, HKUST, Version correct as of 03/01/2015, (c) The British Standards Institution 2013

Licensed copy: Lee Shau Kee Library, HKUST, Version correct as of 03/01/2015, (c) The British Standards Institution 2013

National foreword

This British Standard is the official English language version of EN 14803:2006.

The UK participation in its preparation was entrusted by Technical Committee B/508, Waste management, to Subcommittee B/508/1, Waste containers and associated lifting devices on refuse collection vehicles, which has the responsibility to:

— aid enquirers to understand the text;

— present to the responsible international/European committee any enquiries on the interpretation, or proposals for change, and keep UK interests informed;

— monitor related international and European developments and promulgate them in the UK.

A list of organizations represented on this subcommittee can be obtained on request to its secretary.

Cross-references

The British Standards which implement international or European publications referred to in this document may be found in the BSI Catalogue under the section entitled “International Standards Correspondence Index”, or by using the “Search” facility of the BSI Electronic Catalogue or of British Standards Online.

This publication does not purport to include all the necessary provisions of a contract. Users are responsible for its correct application.

Compliance with a British Standard does not of itself confer immunity from legal obligations.

Summary of pages

This document comprises a front cover, an inside front cover, the EN title page, pages 2 to 31 and a back cover.

The BSI copyright notice displayed in this document indicates when the document was last issued.

This British Standard was published under the authority of the Standards Policy and Strategy Committee on 31 March 2006

© BSI

Amendments issued since publication

Amd. No.	Date	Comments

ISBN 0 580 48005 4

Licensed copy: Lee Shau Kee Library, HKUST, Version correct as of 03/01/2015, (c) The British Standards Institution 2013

EUROPEAN STANDARD
NORME EUROPÉENNE
EUROPÄISCHE NORM

EN 14803

March 2006

ICS 13.030.01

English Version

Identification and/or determination of the quantity of waste

Identification et/ou détermination de la quantité de déchets

Identifikation und /oder Mengenbestimmung von Abfall

This European Standard was approved by CEN on 28 December 2005.

CEN members are bound to comply with the CEN/CENELEC Internal Regulations which stipulate the conditions for giving this European Standard the status of a national standard without any alteration. Up-to-date lists and bibliographical references concerning such national standards may be obtained on application to the Central Secretariat or to any CEN member.

This European Standard exists in three official versions (English, French, German). A version in any other language made by translation under the responsibility of a CEN member into its own language and notified to the Central Secretariat has the same status as the official versions.

CEN members are the national standards bodies of Austria, Belgium, Cyprus, Czech Republic, Denmark, Estonia, Finland, France, Germany, Greece, Hungary, Iceland, Ireland, Italy, Latvia, Lithuania, Luxembourg, Malta, Netherlands, Norway, Poland, Portugal, Romania, Slovakia, Slovenia, Spain, Sweden, Switzerland and United Kingdom.

EUROPEAN COMMITTEE FOR STANDARDIZATION
COMITÉ EUROPÉEN DE NORMALISATION
EUROPÄISCHES KOMITEE FÜR NORMUNG

Management Centre: rue de Stassart, 36 B-1050 Brussels

© 2006 CEN All rights of exploitation in any form and by any means reserved worldwide for CEN national Members.

Ref. No. EN 14803:2006: E

Licensed copy: Lee Shau Kee Library, HKUST, Version correct as of 03/01/2015, (c) The British Standards Institution 2013

Contents

Page

Foreword 4

Introduction....5

1 Scope....6

2 Normative references 6

3 Terms and definitions....7

4 Requirements....10
4.1 General requirements on safety and health....10
4.2 Data carriers....11
4.3 Sensing devices....13
4.4 On Board Computer (OBC)....15
4.5 Data processing centre (DPC)....15
4.6 Data structure and transfer 16
4.7 Integrity of data....18

Annex A (normative) Positions of transponders on waste containers to be handled by the comb lifting device with identification....19

Annex B (normative) Positions of optical data carriers (dot code/bar code labels) on waste containers....21

Annex C (informative) Recommended positions of transponders on waste containers to be handled by lifting devices other than the comb lifting device defined in A.2 23

Annex D (normative) Integration of systems for ID and DQW on lifting devices – requirements 27

Annex E (normative) Application and registration procedures for manufacturers/suppliers....28

Bibliography....31

Figures

Figure A.1 — Comb lifting device with identification.... 19

Figure B.1 — Definition of lifting level 22

Figure C.1 — Transponder attached to a rib.... 23

Figure C.2 — Transponder attached to the waste container body 24

Figure C.3 — Transponder position on waste containers for trunnion or other lifting device (I).... 25

Figure C.4 — Transponder position on waste container for trunnion lifting device (II), view on emptying side.... 25

Figure C.5 — Transponder position on BG receiver.... 26

Tables

Table 1 — Requirements and tests for transponders 12

Table 2 — Test requirements and acceptance criteria for bar code/dot code stickers 13

Table 3 — Test requirements for sensing devices 14

Table 4 — Code structure of the unique identification in the transponder 17

Table A.1 — Transponder positions 20

Table B.1 — Positions of optical data carriers 21

Licensed copy: Lee Shau Kee Library, HKUST, Version correct as of 03/01/2015, (c) The British Standards Institution 2013

Licensed copy: Lee Shau Kee Library, HKUST, Version correct as of 03/01/2015, (c) The British Standards Institution 2013

Foreword

This European Standard (EN 14803:2006) has been prepared by Technical Committee CEN/TC 183 “Waste management”, the secretariat of which is held by DIN.

This European Standard shall be given the status of a national standard, either by publication of an identical text or by endorsement, at the latest by September 2006, and conflicting national standards shall be withdrawn at the latest by September 2006.

According to the CEN/CENELEC Internal Regulations, the national standards organizations of the following countries are bound to implement this European Standard: Austria, Belgium, Cyprus, Czech Republic, Denmark, Estonia, Finland, France, Germany, Greece, Hungary, Iceland, Ireland, Italy, Latvia, Lithuania, Luxembourg, Malta, Netherlands, Norway, Poland, Portugal, Romania, Slovakia, Slovenia, Spain, Sweden, Switzerland and United Kingdom.

Licensed copy: Lee Shau Kee Library, HKUST, Version correct as of 03/01/2015, (c) The British Standards Institution 2013

Introduction

CEN and CENELEC draw attention to the fact that it is claimed that compliance with this European Standard may involve the use of a patent concerning systems for identification and/or determination of the quantity of waste described within this European Standard.

CEN and CENELEC take no position concerning the evidence, validity and scope of this patent right.

The holder of this patent right has assured CEN and CENELEC that he/she is willing to negotiate licences under reasonable and non-discriminatory terms and conditions with applicants throughout the world. In this respect, the statement of the holder of this patent right is registered with CEN and CENELEC. Information may be obtained from:

Plastic Omnium
1, rue du Parc
92593 Levallois Cedex
France

Envicomp Systemlogistik GmbH & Co. KG
Bielitzer Str. 42 33699 Bielefeld Germany

Attention is drawn to the possibility that some of the elements of this European Standard may be the subject of patent rights other than those identified above. CEN and CENELEC shall not be held responsible for identifying any or all such patent rights.

Licensed copy: Lee Shau Kee Library, HKUST, Version correct as of 03/01/2015, (c) The British Standards Institution 2013

1 Scope

This European Standard specifies general requirements and verifications for methods of identification of waste containers and/or determination of the quantity of waste including:

- safety requirements;
- interface requirements and performances;
- data to be treated and their integrity.

This European Standard is applicable to systems for handling containers conforming to EN 840.

NOTE Although this European Standard does not cover systems for handling containers not conforming to EN 840, it is recommended to apply the requirements of this document to these systems as far as possible.

This European Standard is applicable to systems both for billing and not for billing.

2 Normative references

The following referenced documents are indispensable for the application of this European Standard. For dated references, only the edition cited applies. For undated references, the latest edition of the referenced document (including any amendments) applies.

EN 840-1, *Mobile waste containers — Part 1: Containers with 2 wheels with a capacity up to 400 l for comb lifting devices — Dimensions and design*

EN 840-2, *Mobile waste containers — Part 2: Containers with 4 wheels, with a capacity up to 1 300 l with flat (lid(s), for trunnion and/or comb lifting devices — Dimensions and design*

EN 840-3, *Mobile waste containers — Part 3: Containers with 4 wheels with a capacity up to 1 300 l with dome lid(s), for trunnion and/or comb lifting devices — Dimensions and design*

EN 840-4, *Mobile waste containers — Part 4: Containers with 4 wheels with a capacity up to 1 700 l with flat lid(s), for wide trunnion or BG- and/or wide comb lifting devices — Dimensions and design*

EN 840-5, *Mobile waste containers — Part 5: Performance requirements and test methods*

EN 840-6, *Mobile waste containers — Part 6: Safety and health requirements*

EN 1501 (all parts), *Refuse collection vehicles and their associated lifting devices — General requirements and safety requirements*

EN 45501:1992, *Metrological aspects of non-automatic weighing instruments*

EN 60068-2-1, *Environmental testing — Part 2: Tests; tests A: Cold (IEC 60068-2-1:1990)*

EN 60068-2-2, *Basic environmental testing procedures — Part 2: Tests — Tests B: Dry heat (IEC 60068 2-2:1974 + IEC 60068-2-2A:1976)*

EN 60068-2-6, *Environmental testing — Part 2: Tests — Test Fc: Vibration (sinusoidal) (IEC 60068-2-6:1995 + Corrigendum 1995)*

EN 60068-2-27, *Basic environmental testing procedures — Part 2: Tests — Test Ea and guidance: Shock (IEC 60068-2-27:1987)*

Licensed copy: Lee Shau Kee Library, HKUST, Version correct as of 03/01/2015, (c) The British Standards Institution 2013

EN 60068-2-38, *Environmental testing — Part 2: Tests — Test Z/AD: Composite temperature/humidity cyclic test (IEC 60068-38:1974)*

EN 60204-1, *Safety of machinery — Electrical equipment of machines — Part 1: General requirements (IEC 60204-1:1997)*

EN ISO 7250, *Basic human body measurements for technological design (ISO 7250:1996)*

OIML R 51, *Automatic catchweighing instruments*

3 Terms and definitions

For the purposes of this European Standard, the following terms and definitions apply.

3.1
identification (ID)
process which consists in accurately recognising and verifying a waste container by reading a data carrier

3.2
determination of the quantity of waste (DQW)
determination of the waste volume stored within the receptacle and/or weighing of the waste mass and/or counting of emptying operations

3.3
data carrier
device carrying data which can be recognised by an electro-magnetic, optical or other reading device

3.4
interface (IF)
boundary linking two systems

NOTE The interface could be a mechanical interface, a data interface, an electrical interface etc.

For the purposes of this document interfaces (IF) are numbered as follows:

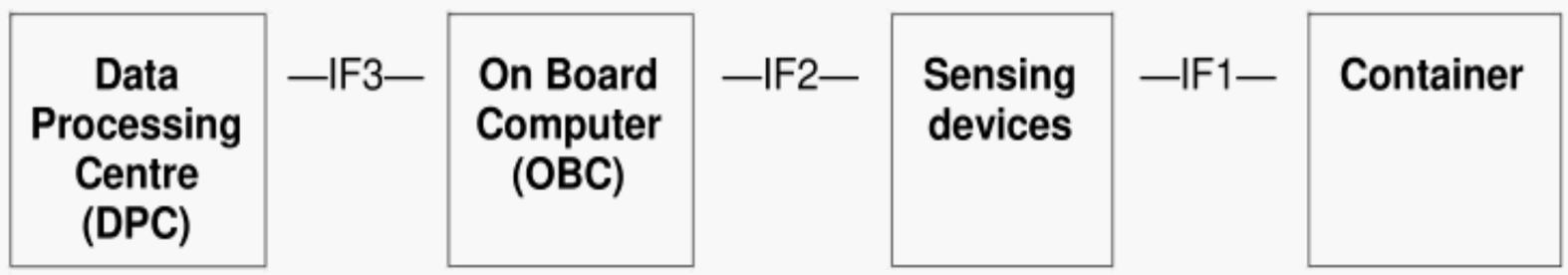

3.5
manipulation
deliberate and unauthorized modification, addition, omission or suppression of signals or data or procedures or components

3.6
malfunction
non-deliberate modification, addition, omission or suppression of signals or data

3.7
data processing

3.7.1
storage
recording of data relating to the collection of waste

Licensed copy: Lee Shau Kee Library, HKUST, Version correct as of 03/01/2015, (c) The British Standards Institution 2013

3.7.2
transfer
process or method of transmitting data relating to the collection of waste

3.7.3
read
process of retrieving data from some machine-readable medium and, as appropriate, the contention and error control management, and channel and source decoding required to recover and communicate the data entered at source

3.7.4
read only (RO)
distinguishing a transponder in which the data is stored in an unchangeable manner and can therefore only be read

3.7.5
read/write (R/W)
applied to a radio frequency identification system, it is the ability both read data from a transponder and to change data (write process) using a suitable programming device

3.7.6
write once/read many (WORM)
distinguishing a transponder that can be partly or totally programmed once by the user, and thereafter only read

3.7.7
sensing device
system with one or more sensors which detects and/or processes and transfers signals and/or data (e.g. scanner + decoder, load cell + processing unit)

3.7.8
encryption
means of securing data, often applied to a plain or clear text, by converting it to a form that is unintelligible in the absence of an appropriate decryption key

3.8
identification systems

3.8.1
transponder
data carrier (also called “electromagnetic label”) associated with the object to be identified. The transponder is intended to receive a radio frequency signal and to return a different radio frequency signal containing relevant information

3.8.2
bar code symbol
data carrier made up of an array of parallel rectangular bars and spaces, arranged according to the encodation rules of a particular symbol specification in order to represent data in machine readable form

NOTE This term and definition were adapted from EN 1556:1998.

3.8.3
dot code symbol
data carrier made up of a series of dots, arranged according to the encodation rules of a particular symbol specification in order to represent data in machine readable form

Licensed copy: Lee Shau Kee Library, HKUST, Version correct as of 03/01/2015, (c) The British Standards Institution 2013

3.8.4
positioning system by geographical co-ordinates (GPS)
identification of a location with geographical co-ordinates (e.g. longitude, latitude, altitude)

3.8.5
antenna
electronic component which emits or receives energy to/from a data carrier within a radio frequency spectrum

NOTE Antennas are also used to receive data from GPS satellites.

3.8.6
transponder reader
sensing device which, with an antenna, transmits a radio signal according to a given frequency towards one or more transponders and receives a signal back. The reader is used to establish dialogue without contact with the transponder and to exchange data

3.8.7
bar code reader
sensing device used to capture the data encoded in a bar code symbol. It consists of two parts: a) the scanner, an input device which sends signals proportional to the reflectivity of each successive element of the symbol to the decoder, and b) the decoder, which examines the signals from the scanner and translates them into recognisable or computer-compatible data. The decoder itself is sometimes erroneously called a reader

[EN 1556:1998]

3.8.8
dot code reader
sensing device used to capture the data encoded in a dot code symbol. It consists of two parts: a) the scanner, an input device which sends signal proportional to the reflexivity of each successive element of the symbol to the decoder, and b) the decoder, which examines the signals from the scanner and translates them into recognisable or computer compatible data. The decoder itself is sometimes erroneously called a reader

3.9
systems for the determination of the quantity of waste (DQW systems)

3.9.1
volume determination
determination of the waste volume stored within the receptacle

3.9.2
weighing
determination of the waste mass

3.9.3
static weighing
determination of the mass after the weighing instrument has detected that the mass indication has ‘no motion’. The detection of ‘no motion’ is done according to the regulations written in EN 45501

3.9.4
dynamic weighing
determination of the mass while the container to be weighed is in motion

3.9.5
automatic weighing instrument
instrument that weighs without the intervention of an operator and follows a pre-determined program of automatic process characteristic of the instrument

[OIML R51]

Licensed copy: Lee Shau Kee Library, HKUST, Version correct as of 03/01/2015, (c) The British Standards Institution 2013

3.9.6
non-automatic weighing instrument
instrument that requires the intervention of an operator during the weighing process, for example to deposit on or remove from the receptor the load to be measured and also to obtain the result

[EN 45501:1992]

3.9.7
volume level determination
determination of the quantity of waste inside a receptacle with a certain known volume, by measuring the filling level of that receptacle

3.9.8
on board computer (OBC)
electronic device for storing and receiving data and performing calculations. The OBC is fitted on the refuse collection vehicle. The OBC transfers data from/to sensing devices and to/from the data processing centre (DPC)

3.9.9
data processing centre (DPC)
electronic device for storing and receiving data and performing calculations separate from the vehicle. The DPC transfers data from/to OBCs

4 Requirements

4.1 General requirements on safety and health

4.1.1 Every component and procedure for identification (ID) and/or determination of the quantity of waste (DQW) shall not influence the safety and/or on the correct operation of the refuse collection vehicle (RCV) including the lifting device.

4.1.2 The fitting of components to the waste container shall not have any influence on the safe use of the waste container.

4.1.3 All components for ID and DQW, when used on vehicles conforming to EN 1501, shall conform to the EMC requirements as defined in EN 1501.

4.1.4 If an existing RCV or lifting device is modified by fitting an ID or DQW system then the conformity with EN 1501 and relevant standards shall be checked again.

If the fitting of the sensing devices changes one or more characteristics of the RCV and its associated lifting device (maximum permissible mass, operating…), new characteristics shall be included in the documentation of the RCV and of the lifting device.

A lifting device equipped with systems for ID and DQW shall fulfil the requirements defined in Annex D

NOTE Attention is drawn to the conformity with the requirements of the Machinery Directive (98/37/EC) and the EMC Directives (89/336/EC, 95/54/EC) if an existing refuse collection vehicle or lifting device is modified by fitting an ID or DQW system.

4.1.5 The system consisting of the OBC and the sensing devices for ID and for DQW shall be galvanically separated from the controlling unit of the lifting device and shall not negatively affect the functions of the chassis, bodywork and lifting device.

4.1.6 The components for ID and DQW shall be fitted in such a way that they do not generate any risk for any person (driver, operator, other person) under normal and emergency situations.

Licensed copy: Lee Shau Kee Library, HKUST, Version correct as of 03/01/2015, (c) The British Standards Institution 2013

4.1.7 Where handling of elements by persons is necessary, dimensions of related devices shall be based on EN ISO 7250.

4.1.8 All electrical systems shall conform to EN 60204-1.

4.1.9 Every component shall be installed in accordance with the instructions of its manufacturer.

4.2 Data carriers

4.2.1 Positioning on the container

4.2.1.1 Manufacturers instructions

The manufacturer of ID devices shall provide detailed instructions on the assembly of fitting of data carriers on the containers in particular regarding dimensions, tolerances and orientation.

4.2.1.2 Position

4.2.1.2.1 General

The position of data carriers on containers shall be such that safe and unambiguous communication with the reader is possible and that the risk that the data carrier is damaged is minimal.

4.2.1.2.2 Transponder position for automatic reading or writing

If containers are lifted by the comb lifting device defined in A.2, the position of transponders shall be such that the axis of the transponders are aligned with the position indicated in A.3. If containers are not lifted by the comb lifting device defined in A.2, other positions can be used, for which recommendations are given in informative Annex C.

4.2.1.2.3 Transponder position for manual reading or writing

The transponder position shall conform to ergonomic recommendations to allow the reading and the writing in a proper position for the operator. The positions defined in A.3 conform to ergonomic recommendations.

4.2.1.2.4 Optical data carrier position (dot code/ bar code) for automatic reading

The optical data carrier position shall conform to one of the options in normative Annex B, depending on the lifting device.

4.2.1.2.5 Optical data carrier (dot code/bar code) position for manual reading

The optical data carrier position shall conform to ergonomic recommendations to allow the reading and the writing in a proper position for the operator. The positions defined in Annex B does not conform to ergonomic recommendations. It is necessary in the case of using optical data carriers for both type of reading (automatic and manual) to fit a redundant optical data carrier in a position compliant with ergonomic recommendations. It is also possible to use a handled optical reader that allow the reading of the optical data carrier fitted in the positions defined in Annex B in a proper position for the operator.

4.2.2 Performance

4.2.2.1 Transponders shall fulfil the requirements of Table 1, and continue to function correctly after the tests.

4.2.2.2 Transponders shall remain securely fastened to the waste container and continue to function correctly, after the waste container with the data carrier attached is tested in accordance with EN 840-5.

Licensed copy: Lee Shau Kee Library, HKUST, Version correct as of 03/01/2015, (c) The British Standards Institution 2013

4.2.2.3 Bar code and dot code stickers and their attachment to the container shall conform to Table 2.

Table 1 — Requirements and tests for transponders

	Glass or plastic encapsulated transponder
Characteristic	
Operating temperature; RO, R/W and WORM	- 25 °C to + 70 °C
mechanical shock EN 60068-2-27, test Ea	200 g, half sine, 3 ms, 2 axes 6 shocks per axis
Vibration EN 60068-2-6, test Fc	10 g, 10 Hz to 500 Hz, 2 axes, 10 test cycles /axe
protection class	IP 67

Licensed copy: Lee Shau Kee Library, HKUST, Version correct as of 03/01/2015, (c) The British Standards Institution 2013

Table 2 — Test requirements and acceptance criteria for bar code/dot code stickers

CHARACTERISTIC		TEST METHOD	ACCEPTANCE CRITERIA
Operating temperature	- 20 °C to + 60 °C	Dry Heat test EN 60068-2-2, test Bd., 72 h at + 60 °C Composite temperature / humidity cyclic test EN 60068-2-38, 72 h at 50 °C in humid room (95 % relative humidity) Cold test EN 60068-2-1, 72 h at – 20 °C	No modification of colours, no bubbles or blister, no pouring of ink
Adhesion, ultimate	600 N/m	pull the sticker off the surface with 600 N/m trial band width: 25 mm	No strata separation shall occur
Readability by automatic identification		Visual check by human, clear instructions in the fitting manual of the stickers	check fitting: the sticker shall have no blister or bubbles
Water resistance 200 h immersion		Sticker sticked on material of waste container: 200 h immersion under water, water temperature + 50 °C	No modification of colours, no bubbles or blister, no pouring of ink
Solvent resistance		Sticker sticked on material of waste container: 50 h immersion under diesel, diesel temperature + 10 °C 50 h immersion under oil 10w40, oil temperature + 10 °C	No strata separation shall occur no modification of colours, no bubbles or blister, no pouring of ink
Holding for high pressure washing		water temperature: 60 °C water pressure: 115 bar, output throwing kind of throwing: rake speed of throwing moving: 10 cm/s. throwing distance: 20 cm	No strata separation shall occur no modification of colours, no bubbles or blister, no pouring of ink
UV Resistance		Exposition of 500 h, with a U.V. lamp (lamp HPLR400) on a distance of 0,5 m	No alteration on colours or other aspects (bubbles, cracking)

4.3 Sensing devices

4.3.1 General requirements for all sensing devices for ID and DQW

4.3.1.1 Sensing devices including their wiring shall withstand the normal strains applied to their support.

4.3.1.2 The manufacturer of sensing devices shall provide detailed mounting instructions for the sensing devices in particular regarding dimensions, tolerances and orientation, electrical specifications, information on when during the lifting cycle and position of the lifting device the measuring takes place, and any other information necessary for correct installation and operation.

4.3.1.3 Sensing devices shall be protected in such a way that any electrical short circuit does not result in more damage.

4.3.1.4 Power supply

4.3.1.4.1 After a short electrical power interruption or electrical burst as defined in EN 45501, all sensing devices shall resume their normal function. When such a power interruption occurs, only the weighing and identification cycle taking place during the interruption may be influenced. All other data before shall remain unchanged.

Licensed copy: Lee Shau Kee Library, HKUST, Version correct as of 03/01/2015, (c) The British Standards Institution 2013

4.3.1.4.2 If a power interruption longer than that defined in 4.3.1.4.1 occurs during ID or DQW operations, the malfunction shall be indicated to the operator, and the sensing devices shall be automatically put out of service. The return to normal operation shall only be possible after a reset operation of the ID and DQW system by the operator. If power interruption occurs but not during ID or DQW operations, automatic return to normal functioning shall take place.

4.3.1.4.3 The sensing devices shall continue to function correctly during the variations in the power supply given in EN 45501.

4.3.1.4.4 Sensing devices operated from battery power shall indicate whenever the voltage drops below the minimum required value and shall under those circumstances either continue to function correctly, or be automatically put out of service.

4.3.1.5 Sensing devices except contact-less optical readers with cameras shall have a degree of protection of at least IP 65. Contact-less optical readers with cameras shall have a degree of protection of at least IP 68.

4.3.1.6 Sensing devices shall continue to function correctly when tested in accordance with Table 3.

Table 3 — Test requirements for sensing devices

	Devices mounted on the vehicle body, excluding lifting device	**Devices mounted on the lifting device**
Characteristic		
Operating temperature	-10 °C to + 40 °C	Requirements shall be defined in collaboration between manufacturer and supplier of the vehicle.
Mechanical shock EN 60068-2-27	20 g to 40 g, 10 ms, 6 shocks /axis	
Vibration EN 60068-2-6	5 g to 10 g/axle, 10 Hz to 300 Hz, 10 test cycles/axis	

4.3.2 Additional requirements for identification systems

4.3.2.1 General requirements for all identification systems

The ID system shall have provisions that, upon each lift operation, the unique identification of the data carrier is checked via the reader system's internal firmware and tested for validity. The unique identification is then passed to the OBC for further validity checks. If either system generates an error the OBC shall store this error and also generate a signal that could be used to stop the lifter. This signal shall be generated by the OBC and shall be selectable whether it stops the lifting cycle or not.

A procedure for further handling of detected errors shall be defined in agreement between the supplier of the ID system and the operator.

4.3.2.2 Additional requirements for contact-less transponder readers

The frequency at which the radio frequency identification system operates shall be one of the following frequencies:

Licensed copy: Lee Shau Kee Library, HKUST, Version correct as of 03/01/2015, (c) The British Standards Institution 2013

Low frequency	< 135 kHz
Medium frequency	13,56 MHz
High frequency	2,45 GHz

4.3.2.3 Additional requirements for contact-less optical readers

Contact-less optical readers shall operate with wavelengths outside the range of the visible light.

4.3.3 Additional requirements for DQW systems

4.3.3.1 General requirements for all DQW systems

The DQW system shall have provisions that if any error is detected, the DQW result is marked automatically, and this marking information is transferred to the DPC together with the associated DQW results.

The DQW system shall have no characteristics likely to facilitate fraudulent use, whereas possibilities for unintentional misuse shall be minimal. Components that influence the correct working of the system shall be secured against such actions.

4.3.3.2 Additional requirements for weighing systems

The maximum permissible errors on the weighing result shall be in accordance with either EN 45501:1992, 5.3 for non-automatic weighing instruments or 2.2 or 2.3 of OIML R 51 for automatic weighing instruments.

NOTE Attention is drawn to the fact that weighing instruments for this purpose may be subject to additional national regulations, especially in case of weight price trading. Depending on the country of use, this may lead to for example requirements for certification of the weighing instruments and full applicability of EN 45501 for non-automatic weighing instruments or OIML R 51 for automatic weighing instruments. If all the requirements of EN 45501 or OIML R 51 as appropriate are fulfilled, the requirements of 4.3.1 are automatically fulfilled.

4.4 On Board Computer (OBC)

4.4.1 The OBC shall serve as central monitoring unit for all sensing devices and report important malfunctions of the sensing devices (e.g. a defect load cell or reading device), with the exception of weighing systems where the OBC is not part of the approval of the weighing system.

4.4.2 The OBC shall safely store data up to the moment that the safe transfer to the DPC is confirmed. The storage capacity of the OBC shall be enough for storing the data of at least 10 000 bin emptying operations.

4.4.3 The OBC shall monitor itself regarding any manual interference. If this is detected, the stored information shall be marked.

4.4.4 The OBC shall have a degree of protection of at least IP 54.

4.5 Data processing centre (DPC)

4.5.1 Safe transfer of data from and to the DPC shall be guaranteed.

4.5.2 If the DPC has safely received data from the OBC, this shall be confirmed by the DPC to the OBC.

Licensed copy: Lee Shau Kee Library, HKUST, Version correct as of 03/01/2015, (c) The British Standards Institution 2013

4.6 Data structure and transfer

4.6.1 Data in the data carriers

4.6.1.1 Transponder

The information in the first 64 user bits in the transponder shall form the unique identification of the transponder and shall conform to Table 4.

NOTE For RO transponders, these are the first 64 bits. For programmable transponders, these are the first 64 bits in the programmable area, i.e. excluding header, page design, etc, where applicable.

Whatever the transponder technology used (e.g. RO, WORM, R/W), this unique identification shall be present in the transponder, non erasable, non modifiable, accessible for all reading devices, without encryption and/or password in reading.

Whatever the transponder technology used (e.g. RO, WORM, R/W), this unique identification shall be the link between the waste container, and the database allowing its invoice management.

4.6.1.2 Bar code/dot code

The bar code or dot code system shall be in accordance with appropriate standards (for example ISO/IEC, EN, EAN, AIM or others if appropriate) to ensure a unique identification. The supplier of the system shall provide the appropriate decoding key to the purchaser of the identification system.

4.6.2 Data transfer from container to sensing devices for ID on the vehicle (interface IF 1)

The minimum data to be transferred shall be the unique identification.

4.6.3 Data transfer from the OBC of the refuse collection vehicle to the DPC (interface IF 3)

The minimum data to be transferred shall be: the unique identification, date and time. Optional are weight, volume, position (GPS) and others if applicable.

Licensed copy: Lee Shau Kee Library, HKUST, Version correct as of 03/01/2015, (c) The British Standards Institution 2013

Table 4 — Code structure of the unique identification in the transponder

NOTE Bit No 1 in the code is the most significant Bit (MSB); bit No 64 is the least significant Bit (LSB).

Bit No:

1		**33**	**64**
1 Bit	**31 Bits** **application code**	**32 Bits** **manufacturer/supplier code and serial number**	

1 **Bit no**	**number of Bits**	**2** **information**	**3** **contents**	**4** **comment**
1	1	Animal/non-animal	0 (non-animal)	Based on ISO 11784
2	1	Type of transponder	x	0 = read only 1 = multi page
3 to 32	30	reserved	000 0000 1000 0000 0000 0000 0000 000	Application identifier for waste management
33 to 42	10	Manufacturer/ supplier code	xxxx xxxx xx	Code assigned by the registration authority
43 to 64	22	Serial Number	xxxx xxxx xxxx xxxx xxxx xx	Serial number issued by the manufacturer/supplier

Bit No 1: Shall be set to zero (0)
(one (1) is reserved for animal ID as defined in ISO 11784).

Bit No 2: This Bit shall be set in accordance with the type of transponder (0 = read only, 1 = multi page).

Bit No 3 to 32: these Bits shall be set in the above mentioned way.
(Bit no 10 shall be set 1 all the others 0)

Bit No 33 to 42: manufacturer/supplier code
This unique code is assigned by the registration authority.

Bit No 43 to 64: serial number issued by manufacturer/supplier, who shall be responsible for the uniqueness of this number.

The manufacturer/supplier and the registration authority shall conform to Annex E.

NOTE At the date of publication of this European Standard the registration authority for this European Standard is: Nederlands Normalisatie-instituut, PO Box 5059, 2600 GB Delft, the Netherlands, www.nen.nl

Licensed copy: Lee Shau Kee Library, HKUST, Version correct as of 03/01/2015, (c) The British Standards Institution 2013

4.7 Integrity of data

The level of the data protection for the data transfer between:

- data carriers and devices that read the data carrier;
- identification systems and OBC;
- DQW systems and OBC;
- OBC and DPC

shall be agreed between purchaser and supplier and shall be described and be in accordance with the requirements for data protection in the country/countries where the system operates, to ensure the quality of the information.

Licensed copy: Lee Shau Kee Library, HKUST, Version correct as of 03/01/2015, (c) The British Standards Institution 2013

Annex A
(normative)

Positions of transponders on waste containers to be handled by the comb lifting device with identification

A.1 General

Dimensions in this annex are in millimetres and have tolerances of ± 3 mm, except where specified otherwise.

A.2 Comb lifting device with identification

Dimensions in millimetres

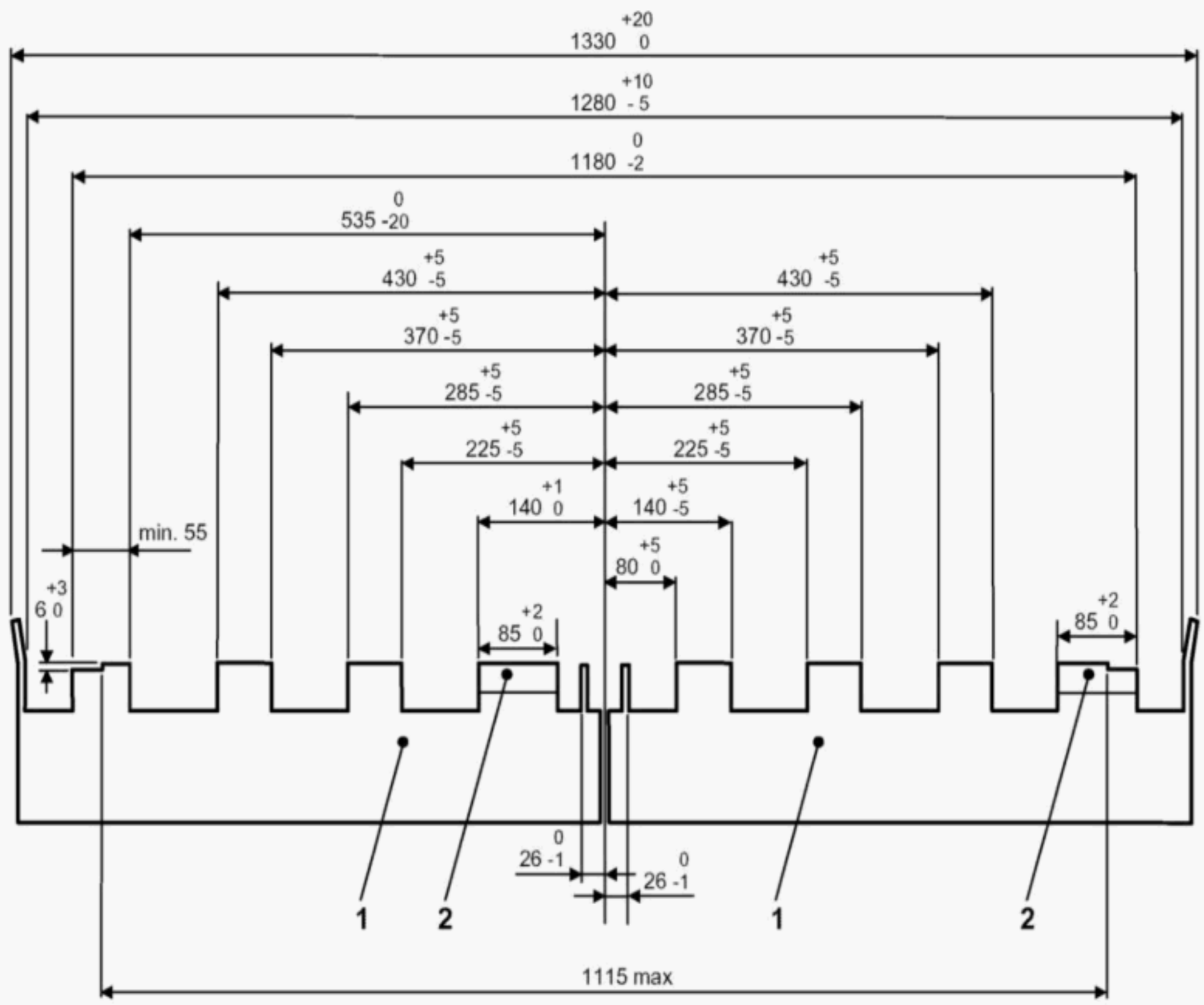

Key

1 Comb lifting device
2 Antenna

NOTE In CEN/TC 183 a part 5 of EN 1501 is in preparation dealing with lifting devices including specifications of the comb. It is the intention to replace Figure A.1 by a reference to EN 1501-5 when EN 1501-5 is published.

Figure A.1 — Comb lifting device with identification

Licensed copy: Lee Shau Kee Library, HKUST, Version correct as of 03/01/2015, (c) The British Standards Institution 2013

A.3 Transponder positions on waste containers with frontal receiver

Table A.1 — Transponder positions

Dimensions in millimetres

Frontal receiver form [a]	Transponder positions on waste containers	
	Containers with 2 wheels	Containers with 4 wheels
A, B	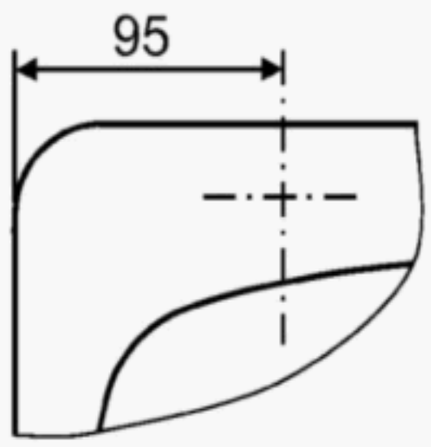	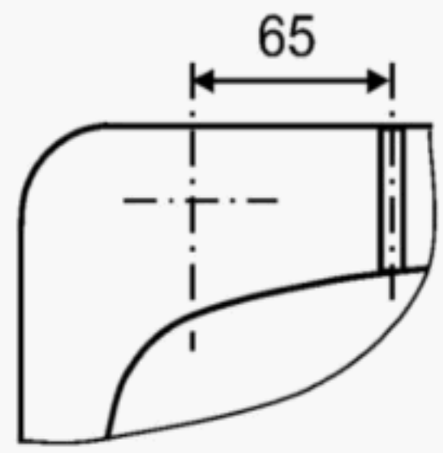
C		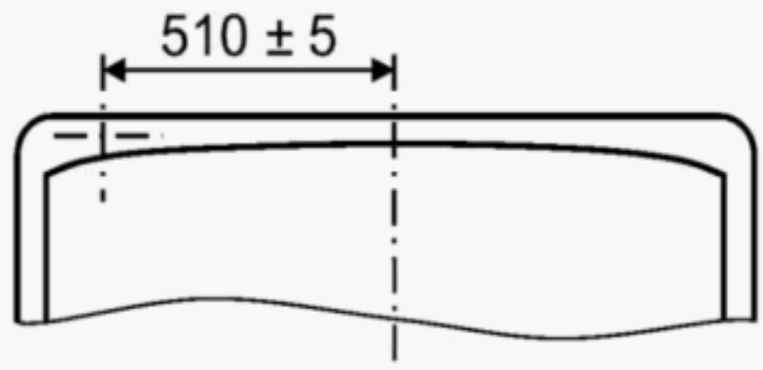
NOTE The view is from below.		
a Shall be in accordance with EN 840.		

Licensed copy: Lee Shau Kee Library, HKUST, Version correct as of 03/01/2015, (c) The British Standards Institution 2013

Annex B
(normative)

Positions of optical data carriers (dot code/bar code labels) on waste containers

Table B.1 — Positions of optical data carriers

Dimensions in millimetres

Option	Positions of optical data carrier on waste containers	
	Containers with 2 wheels	Containers with 4 wheels
I	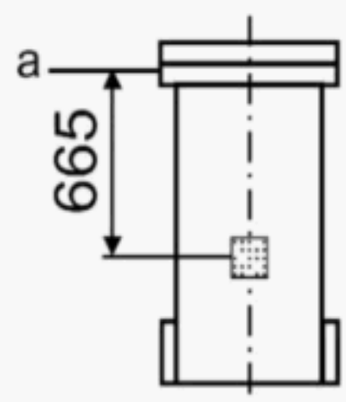	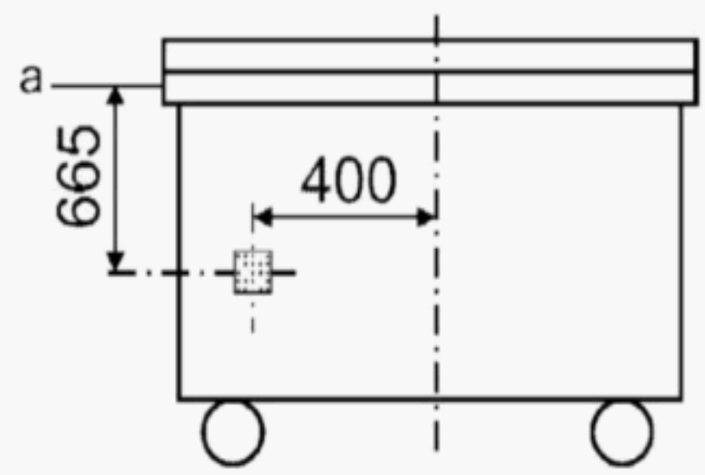
II		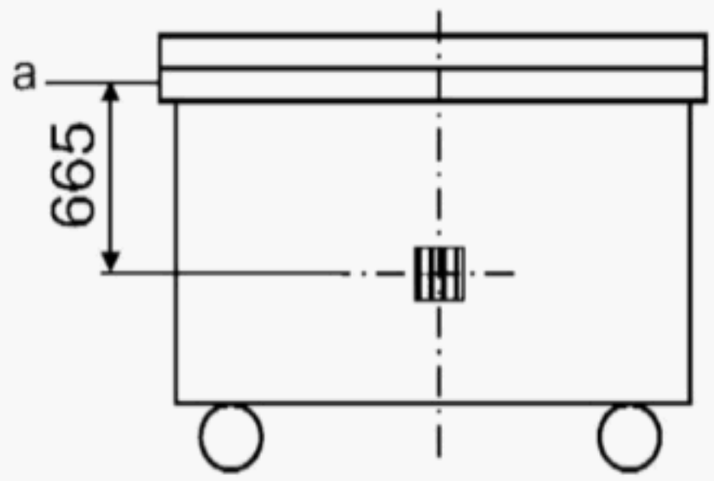
For dot code labels a horizontal and vertical tolerance of 100 mm is allowed. For bar code labels a horizontal and vertical tolerance of 20 mm is allowed. NOTE The figures show dot code or bar code labels only as examples; this does not preclude the use of other optical data carriers.		
a Lifting level, as defined in Figure B.1		

Licensed copy: Lee Shau Kee Library, HKUST, Version correct as of 03/01/2015, (c) The British Standards Institution 2013

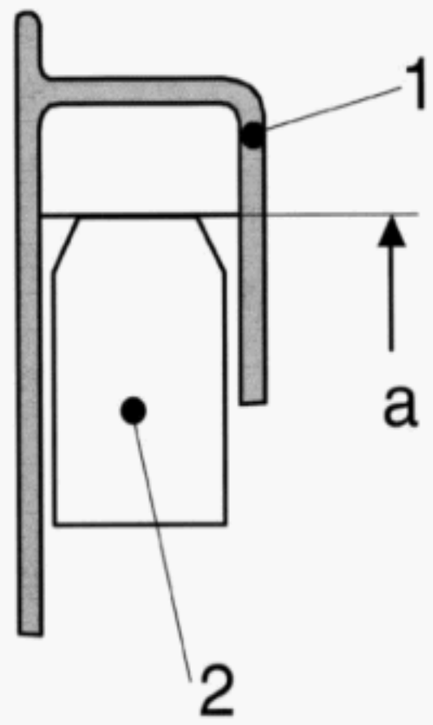

Key

1 Frontal receiver of waste container
2 Comb lifting device
a Lifting level

Figure B.1 — Definition of lifting level

Licensed copy: Lee Shau Kee Library, HKUST, Version correct as of 03/01/2015, (c) The British Standards Institution 2013

Annex C
(informative)

Recommended positions of transponders on waste containers to be handled by lifting devices other than the comb lifting device defined in A.2

C.1 Comb lifting devices other than the comb lifting device defined in A.2

C.1.1 Transponder positions (I)

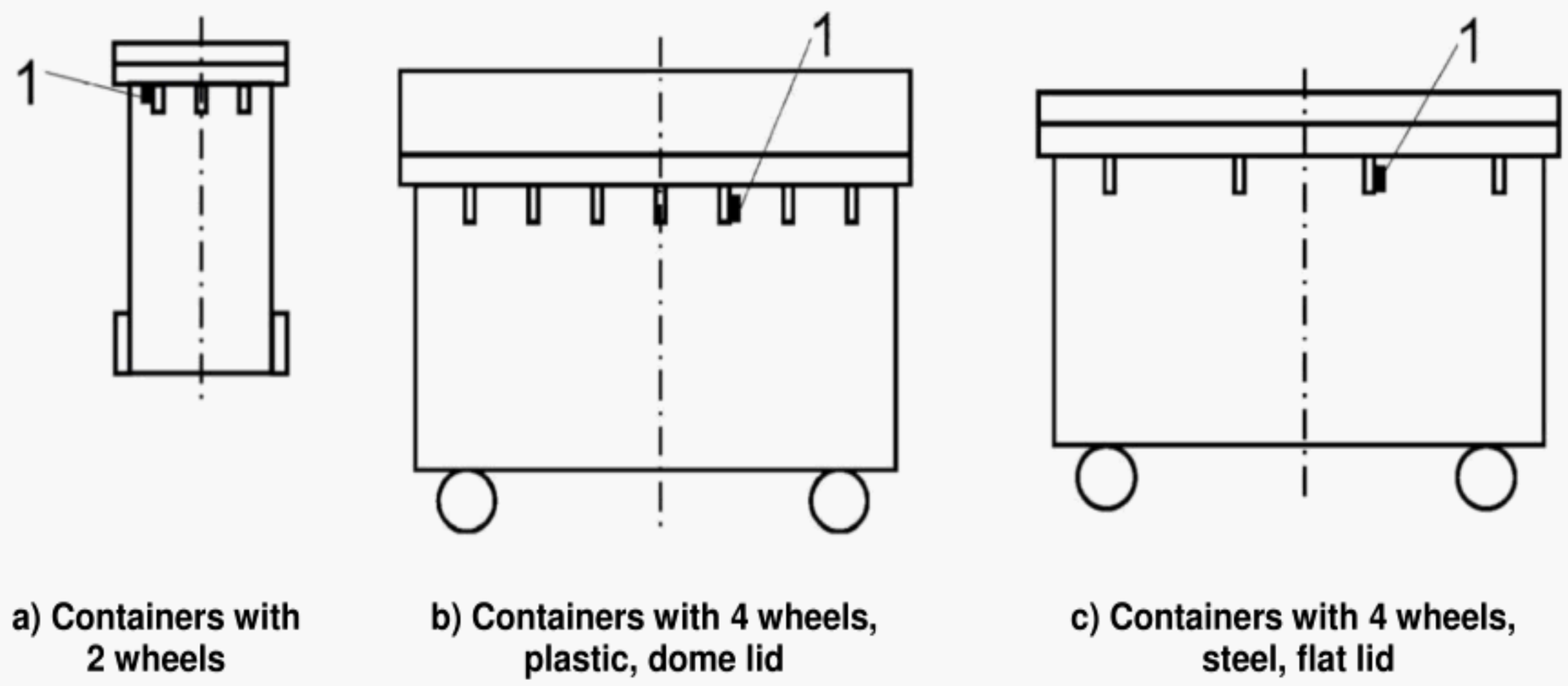

a) Containers with 2 wheels

b) Containers with 4 wheels, plastic, dome lid

c) Containers with 4 wheels, steel, flat lid

Key

1 Transponder

Figure C.1 — Transponder attached to a rib

Licensed copy: Lee Shau Kee Library, HKUST, Version correct as of 03/01/2015, (c) The British Standards Institution 2013

C.1.2 Transponder positions (II, III, IV)

Dimensions in millimetres

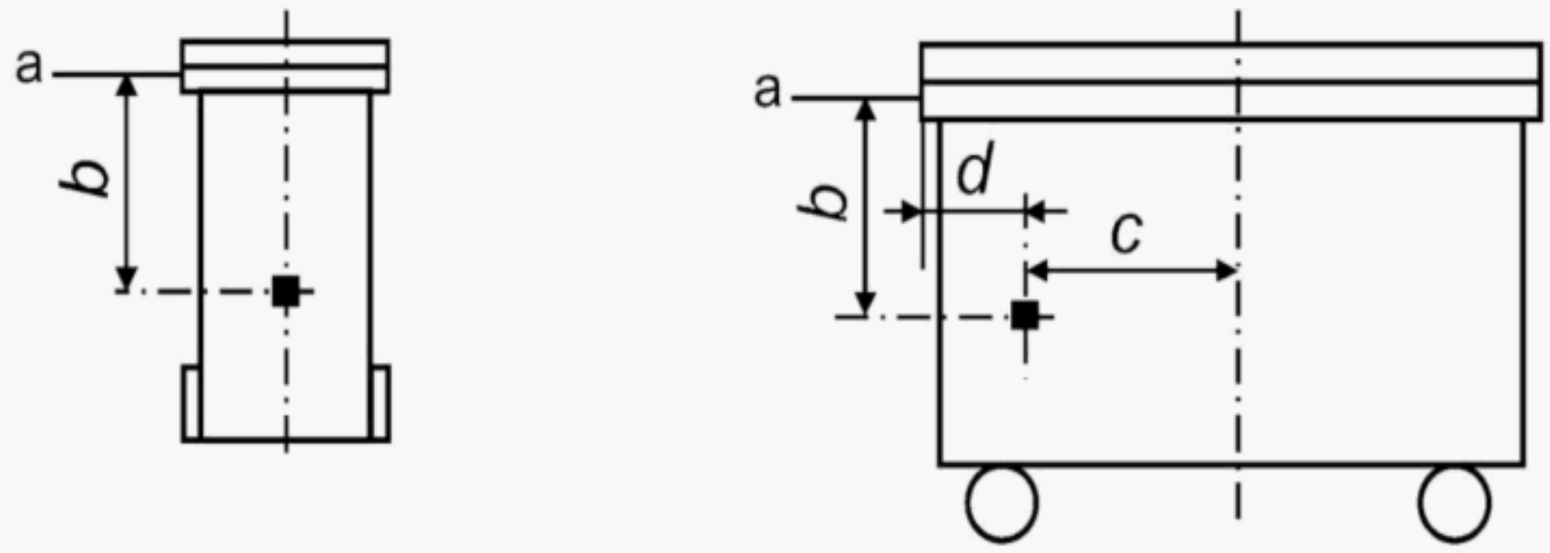

a) Containers with 2 wheels

b) Containers with 4 wheels

Option	*b*	*c*	*d*
II	322	290	-
III	455	0	-
IV	350	-	250

Key

a Lifting level

Figure C.2 — Transponder attached to the waste container body

Licensed copy: Lee Shau Kee Library, HKUST, Version correct as of 03/01/2015, (c) The British Standards Institution 2013

C.2 Lifting devices other than comb lifting devices

C.2.1 Transponder positions for trunnion or other lifting device (I)

Dimensions in millimetres

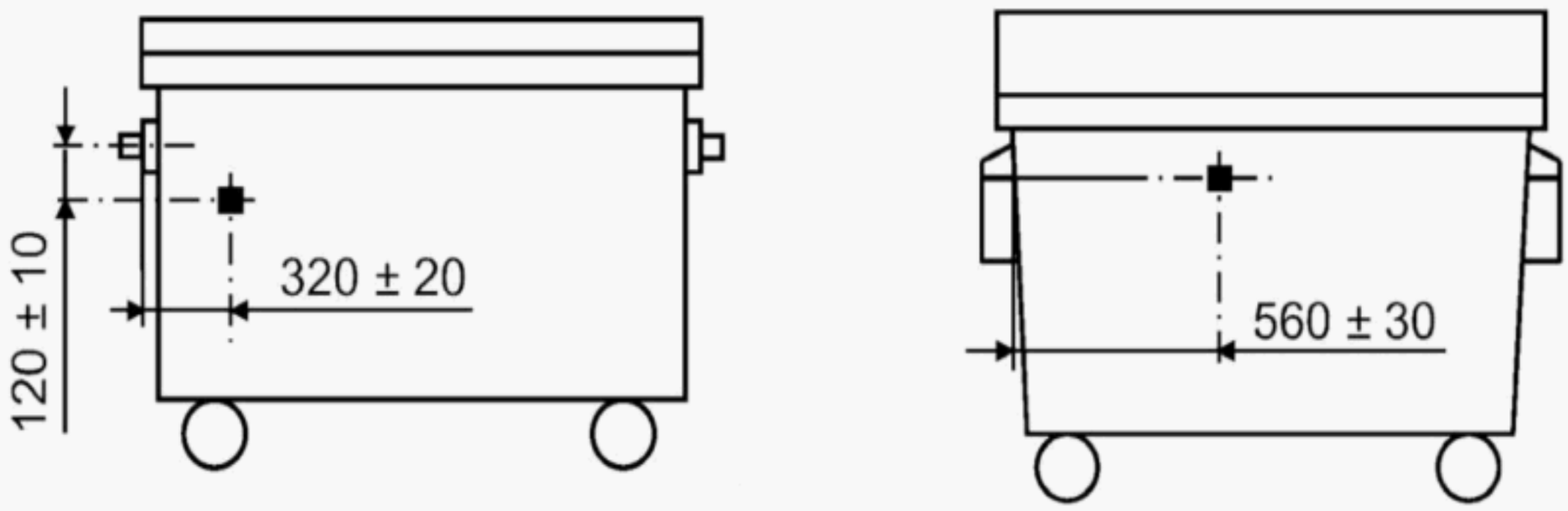

Figure C.3 — Transponder position on waste containers for trunnion or other lifting device (I)

C.2.2 Transponder positions for trunnion lifting device (II)

Dimensions in millimetres

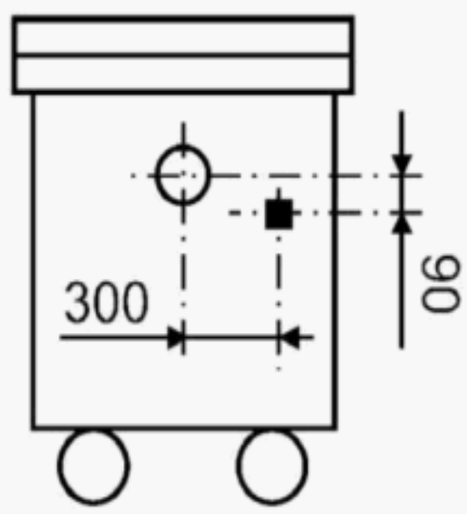

Figure C.4 — Transponder position on waste container for trunnion lifting device (II), view on emptying side

C.2.3 Transponder positions for BG lifting device (in accordance with EN 840-4)

Dimensions in millimetres

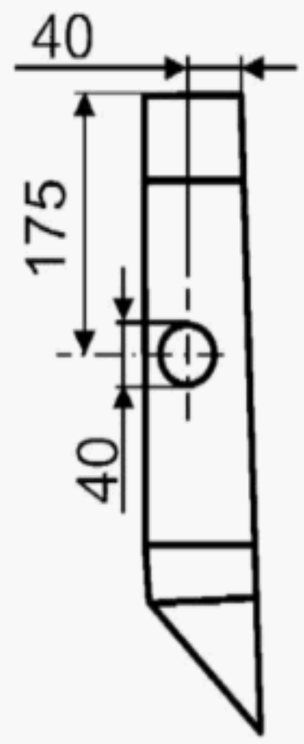

Figure C.5 — Transponder position on BG receiver

Licensed copy: Lee Shau Kee Library, HKUST, Version correct as of 03/01/2015, (c) The British Standards Institution 2013

Licensed copy: Lee Shau Kee Library, HKUST, Version correct as of 03/01/2015, (c) The British Standards Institution 2013

Annex D
(normative)

Integration of systems for ID and DQW on lifting devices – requirements

D.1 Integration of systems on lifting device - requirements

Before and after installation, the lifting device equipped with systems for ID and/or DQW shall undergo a visual inspection with the intention to:

a) verify that the lifting device equipped with systems for ID and/or DQW present neither damage nor visible defects;

b) verify that the manufacturing characteristics of the lifting device equipped with systems for ID and/or DQW are those declared by the manufacturer and or integrator;

c) verify the functioning of the systems for ID and/or DQW;

d) compare the condition of the lifting device before and after installation.

Licensed copy: Lee Shau Kee Library, HKUST, Version correct as of 03/01/2015, (c) The British Standards Institution 2013

Annex E
(normative)

Application and registration procedures for manufacturers/suppliers

E.1 Application procedure for assignment of a manufacturer/supplier code

a) 'applicant' manufacturer/supplier shall apply in writing to the registration authority (RA) for the assignment of a manufacturer/supplier code (see Table 4).

b) RA shall assign an unused manufacturer/supplier code to any company or organization that fulfils the criteria in E.2.

c) in unforeseen cases there may be a need for a manufacturer/supplier to consult the TC as an appeal procedure against the decision of the RA. In this case the consulting party shall make a written request for clarification to the TC 183-Chairman, through the TC 183-Secretariat. The TC 183-Chairman may then delegate the resolution of this request to the relevant Working Group.

d) manufacturer/supplier may request several manufacturer/supplier codes. This may be granted by the RA. Each manufacturer/supplier code shall than be handled as belonging to a separate manufacturer/supplier.

e) reuse of issued manufacturer/supplier codes should be avoided, and in any case expired manufacturer/supplier codes shall not be reused until 5 years after their expiration period.

E.2 Criteria for approval of an application for a manufacturer/supplier code

Applications for a manufacturer/supplier code shall meet the criteria for approval below:

a) applicant shall be a single entity with a legal status;

b) applicant shall use the manufacturer/supplier code for an agreed use within the intended scope of this European Standard;

c) applicant shall pay any fees required by the RA according to the rules in E.6.

E.3 Responsibilities of the manufacturer/supplier

The responsibilities of the manufacturer/supplier shall be:

a) to comply fully with the numbering system and the requirements of this European Standard and its annexes, a manufacturer/supplier may NOT issue a number that has not been allocated to it by the RA;

b) to retain the letter of authorisation of its manufacturer/supplier code by the RA;

c) to issue unique identifications with serial numbers using the manufacturer/supplier code number assigned to them by the RA, and in accordance with the requirements of this European Standard;

d) to communicate to the RA any proposed changes that would alter material facts contained within the original registration;

e) to keep a register of unique identifications with serial numbers within the limits of its intended use, and to maintain such records in a secure place and in accordance with the requirements for data protection in the country/countries where the register is maintained;

Licensed copy: Lee Shau Kee Library, HKUST, Version correct as of 03/01/2015, (c) The British Standards Institution 2013

f) to pay fees in accordance with agreements with the RA based on the guidelines in E.6.

E.4 Responsibilities RA for manufacturer/supplier register

The responsibilities of a RA shall be:

a) to ensure that the application fully complies with the procedures for application for manufacturer/supplier code in this European Standard;

b) to verify that the applicant has declared that his use of numbering structures for unique identifications with serial numbers complies with the requirements of this European Standard;

c) to process, within 60 days of receipt of the applications, the applications for a manufacturer/supplier code;

d) to send notification to the applicant in writing, within the same period of 60 days of receipt of the application, as to the disposition of their application;

e) to assign an unambiguous manufacturer/supplier code to each approved manufacturer/supplier;

f) to maintain a register providing details of all registered manufacturer/suppliers together with their 'manufacturer/supplier code';

g) to retain a copy of each application.

E.5 Register of manufacturers/suppliers

E.5.1 Publication and availability

The RA shall publish a manufacturer/supplier register. The register shall be published in both numerical (manufacturer/supplier code) and alphabetical (manufacturer/supplier name) order.

The final issue of the unique identifications with serial numbers shall remain private and shall not be declared to the RA and shall therefore not appear on any published register whatsoever.

The register of manufacturers/suppliers shall be a publicly available document. The register may be available at the cost of reproduction, or the RA may choose to publish it on the Internet.

E.5.2 Contents

The manufacturer/supplier register shall contain the following information:

a) name of manufacturer/supplier;

b) address and communication address (e.g. tel., fax., e-mail) of manufacturer/supplier and principal contacts within organization;

c) manufacturer/supplier code assigned to the manufacturer/supplier by the RA;

d) date of issuing and date of end of issuing, if any.

E.6 Costs aspects

The costs of the entire registration procedure will be recovered on the basis of nominal cost. An issuer will pay a registration fee and an annual renewal fee to the RA. The registration fees may be set to cover a free public Internet access to the RA registry. The charges for issuing of documents shall be at the cost recovery basis.

E.7 Disclaimer

The following declaration by the RA should be used to protect its position against possible misuse of the coding structure by bodies outside their control.

"IMPORTANT INFORMATION REGARDING YOUR NUMBER ASSIGNMENT"

This manufacturer/supplier code is issued with the understanding that this code will be used in accordance with the requirements in EN 14803. The use of this number or any other number by a party that chooses not to comply with the provisions of this European Standard with or without the knowledge of the RA is beyond the control of the RA. Therefore, the RA cannot guarantee the sole and unambiguous use of this identifier to your organisation. The operation of the RA is a voluntary non-profit service to issuers of unique identifications with serial numbers complying with EN 14803 and its success depends, in part, on the co-operation of issuers of unique identifications with serial numbers. The RA will not be held financially liable for errors in the registration, reservation or assignment of codes or the publication of those identifiers and the names and addresses of the parties to which they are assigned.

Licensed copy: Lee Shau Kee Library, HKUST, Version correct as of 03/01/2015, (c) The British Standards Institution 2013

Bibliography

[1] EN 1556:1998, *Bar coding — Terminology*

[2] ISO 11784, *Radio frequency identification of animals — Code structure*

[3] Commission Directive 95/54/EC of 31 October 1995 adapting to technical progress Council Directive 72/245/EC on the approximation of the laws of the Member States relating to the suppression of radio interference produced by spark-ignition engines fitted to motor vehicles and amending Directive 70/156/EC on the approximation of the laws of the Member States relating to the type-approval of motor vehicles and their trailers.

[4] Directive 98/37/EC of the European Parliament and of the Council of 22 June 1998 on the approximation of the laws of the Member States relating to machinery

[5] Council Directive of 3 May 1989 on the approximation of the laws of the Member States relating to Electromagnetic Compatibility

Licensed copy: Lee Shau Kee Library, HKUST, Version correct as of 03/01/2015, (c) The British Standards Institution 2013

Licensed copy: Lee Shau Kee Library, HKUST, Version correct as of 03/01/2015, (c) The British Standards Institution 2013

BSI — British Standards Institution

BSI is the independent national body responsible for preparing British Standards. It presents the UK view on standards in Europe and at the international level. It is incorporated by Royal Charter.

Revisions

British Standards are updated by amendment or revision. Users of British Standards should make sure that they possess the latest amendments or editions.

It is the constant aim of BSI to improve the quality of our products and services. We would be grateful if anyone finding an inaccuracy or ambiguity while using this British Standard would inform the Secretary of the technical committee responsible, the identity of which can be found on the inside front cover. Tel: +44 (0)20 8996 9000. Fax: +44 (0)20 8996 7400.

BSI offers members an individual updating service called PLUS which ensures that subscribers automatically receive the latest editions of standards.

Buying standards

Orders for all BSI, international and foreign standards publications should be addressed to Customer Services. Tel: +44 (0)20 8996 9001.
Fax: +44 (0)20 8996 7001. Email: orders@bsi-global.com. Standards are also available from the BSI website at http://www.bsi-global.com.

In response to orders for international standards, it is BSI policy to supply the BSI implementation of those that have been published as British Standards, unless otherwise requested.

Information on standards

BSI provides a wide range of information on national, European and international standards through its Library and its Technical Help to Exporters Service. Various BSI electronic information services are also available which give details on all its products and services. Contact the Information Centre.
Tel: +44 (0)20 8996 7111. Fax: +44 (0)20 8996 7048. Email: info@bsi-global.com.

Subscribing members of BSI are kept up to date with standards developments and receive substantial discounts on the purchase price of standards. For details of these and other benefits contact Membership Administration.
Tel: +44 (0)20 8996 7002. Fax: +44 (0)20 8996 7001.
Email: membership@bsi-global.com.

Information regarding online access to British Standards via British Standards Online can be found at http://www.bsi-global.com/bsonline.

Further information about BSI is available on the BSI website at http://www.bsi-global.com.

Copyright

Copyright subsists in all BSI publications. BSI also holds the copyright, in the UK, of the publications of the international standardization bodies. Except as permitted under the Copyright, Designs and Patents Act 1988 no extract may be reproduced, stored in a retrieval system or transmitted in any form or by any means – electronic, photocopying, recording or otherwise – without prior written permission from BSI.

This does not preclude the free use, in the course of implementing the standard, of necessary details such as symbols, and size, type or grade designations. If these details are to be used for any other purpose than implementation then the prior written permission of BSI must be obtained.

Details and advice can be obtained from the Copyright & Licensing Manager.
Tel: +44 (0)20 8996 7070. Fax: +44 (0)20 8996 7553.
Email: copyright@bsi-global.com.

BSI

389 Chiswick High Road

London

W4 4AL