Execution of special geotechnical works — Reinforced fill

The European Standard EN 14475:2006 has the status of a British Standard

ICS 93.020

British Standards

标准分享网 www.bzfxw.com 免费下载

National foreword

This British Standard was published by BSI. It is the UK implementation of EN 14475:2006. It partially supersedes BS 8006:1995 which is currently being revised in order to remove conflicting material. In the meantime, where conflict arises between the two documents the provisions of BS EN 14475 should take precedence.

The UK participation in its preparation was entrusted by Technical Committee B/526, Geotechnics, to Subcommittee B/526/4, Strengthened/reinforced soils and other fills.

A list of organizations represented on B/526/4 can be obtained on request to its secretary.

This publication does not purport to include all the necessary provisions of a contract. Users are responsible for its correct application.

Compliance with a British Standard cannot confer immunity from legal obligations.

This British Standard was published under the authority of the Standards Policy and Strategy Committee on 31 October 2006

© BSI 2006

ISBN 0 580 49309 1

Amendments issued since publication

Amd. No.	Date	Comments

EUROPEAN STANDARD

NORME EUROPÉENNE

EUROPÄISCHE NORM

EN 14475

January 2006

ICS 93.020

Incorporates Corrigendum September 2006

English Version

Execution of special geotechnical works - Reinforced fill

Exécution de travaux géotechniques spéciaux - Remblais renforcés

Ausführung von besonderen technischen Arbeiten (Spezialtiefbau) - Bewehrte Schüttkörper

This European Standard was approved by CEN on 10 November 2005.

CEN members are bound to comply with the CEN/CENELEC Internal Regulations which stipulate the conditions for giving this European Standard the status of a national standard without any alteration. Up-to-date lists and bibliographical references concerning such national standards may be obtained on application to the Central Secretariat or to any CEN member.

This European Standard exists in three official versions (English, French, German). A version in any other language made by translation under the responsibility of a CEN member into its own language and notified to the Central Secretariat has the same status as the official versions.

CEN members are the national standards bodies of Austria, Belgium, Cyprus, Czech Republic, Denmark, Estonia, Finland, France, Germany, Greece, Hungary, Iceland, Ireland, Italy, Latvia, Lithuania, Luxembourg, Malta, Netherlands, Norway, Poland, Portugal, Romania, Slovakia, Slovenia, Spain, Sweden, Switzerland and United Kingdom.

EUROPEAN COMMITTEE FOR STANDARDIZATION
COMITÉ EUROPÉEN DE NORMALISATION
EUROPÄISCHES KOMITEE FÜR NORMUNG

Management Centre: rue de Stassart, 36 B-1050 Brussels

© 2006 CEN All rights of exploitation in any form and by any means reserved worldwide for CEN national Members.

Ref. No. EN 14475:2006: E

标准分享网 www.bzfxw.com 免费下载

Contents

page

Foreword 3

1 Scope.....4

2 Normative references 6

3 Terms and definitions.....8

4 Information needed for construction.....10

5 Geotechnical investigations.....10

6 Materials and products.....11

7 Design considerations.....17

8 Execution.....20

9 Supervision, testing and monitoring.....27

10 Records 27

11 Specific requirements.....28

Annex A (informative) Typical use of fill types depending on application, reinforcement and facing 29

Annex B (informative).....30

Annex C (informative) Facing units and systems 32

Annex D (informative) Some typical reinforcement forms 49

Annex E (informative) Steel reinforcement.....52

Annex F (informative) Recommendations for facing units.....54

Bibliography.....56

Foreword

This document (EN 14475:2006) has been prepared by Technical Committee CEN/TC 288 “Execution of special geotechnical works”, the secretariat of which is held by AFNOR.

This European Standard shall be given the status of a national standard, either by publication of an identical text or by endorsement, at the latest by July 2006, and conflicting national standards shall be withdrawn at the latest by July 2006.

The design of reinforced fill structures is currently carried out using national standards such as BS 8006 (1995) and NF P 94-220 (1998) and other standards. As a matter of fact EN 1997-1, Eurocode 7 (Geotechnical design) does not currently cover the detailed design of reinforced fill structures. The values of partial factors and load factors given in EN 1997-1 have not been calibrated for reinforced fill structures.

Whilst many common features exist between the design methods that have been developed and established in the various member countries of CEN, there are also differences reflecting different working practices, as well as such matters as geological and climatic variations.

In view of these differences, and of the time required to develop a common design method that would fully reflect the various considerations identified in particular national methods, a two stage approach has been adopted for the development of standards for reinforced fill.

In accordance with this two stage approach Working Group 9 was mandated by TC 288 for first producing an EN giving guidance on the Execution of reinforced fill, before working towards a common method of design. This standard represents the implementation of the first part of that mandate.

According to the CEN/CENELEC Internal Regulations, the national standards organizations of the following countries are bound to implement this European Standard: Austria, Belgium, Cyprus, Czech Republic, Denmark, Estonia, Finland, France, Germany, Greece, Hungary, Iceland, Ireland, Italy, Latvia, Lithuania, Luxembourg, Malta, Netherlands, Norway, Poland, Portugal, Romania, Slovakia, Slovenia, Spain, Sweden, Switzerland and United Kingdom.

标准分享网 www.bzfxw.com 免费下载

1 Scope

1.1 This European Standard establishes general principles for the construction of reinforced fill.

1.2 This European Standard covers engineered fills that are reinforced by the inclusion of horizontal or sub-horizontal reinforcement placed between layers of fill during construction.

1.3 The scope of reinforced fill applications considered in this European Standard includes (Figure 1):

earth retaining structures, (vertical, battered or inclined walls, bridge abutments, bulk storage facilities), with a facing to retain fill placed between the reinforcing layers;

reinforced steep slopes with a facing, either built-in or added or wrap-around, reinforced shallow slopes without a facing, but covered by some form of erosion protection without a facing, reinstatement of failed slopes;

embankments with basal reinforcement and embankments with reinforcement against frost heave in the upper part.

Principles for the execution of other special geotechnical works using soil nails, bored piles, displacement piles, micro piles, sheet pile walls, diaphragm walls, grouting or jet grouting are established in other European Standards.

Reinforcement of road pavements is not covered by this Standard.

a) Walls

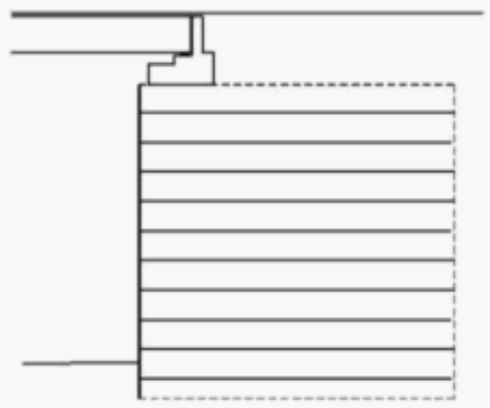

b) Abutments

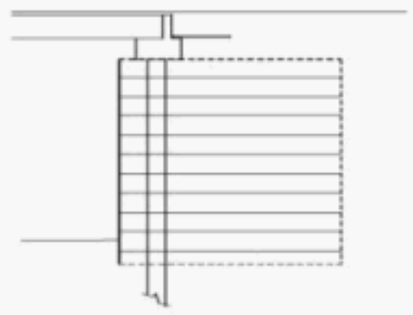

c) Mixed abutments

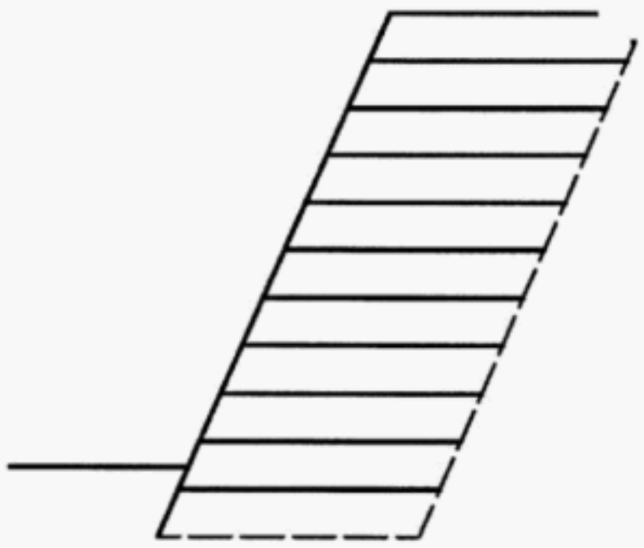

d) Reinforced slopes

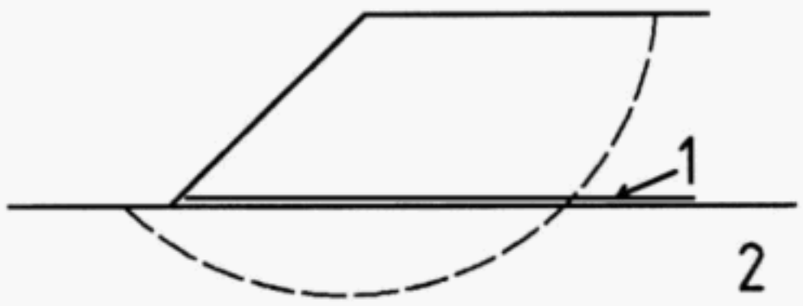

e) Basal reinforcement

Key

1 Reinforcement
2 Soft deposit

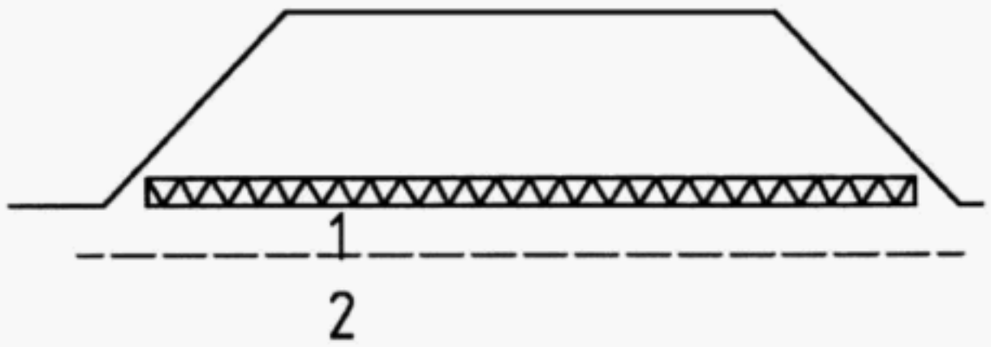

f) Basal mattress

Key

1 Thin soft layer
2 Firm layer

标准分享网 www.bzfxw.com 免费下载

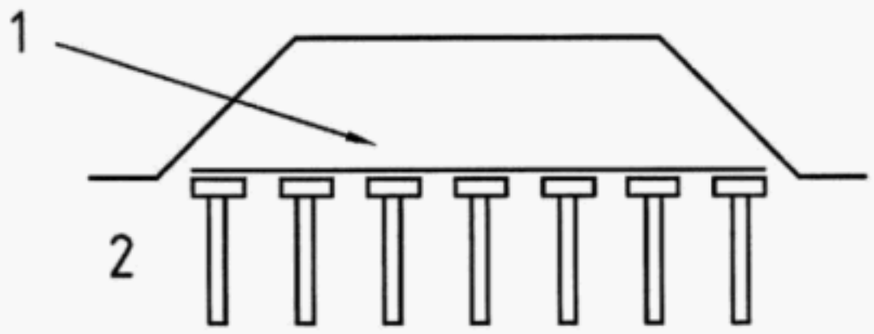

g) Piled embankments with basal reinforcement

Key

1 Reinforcement
2 Piles

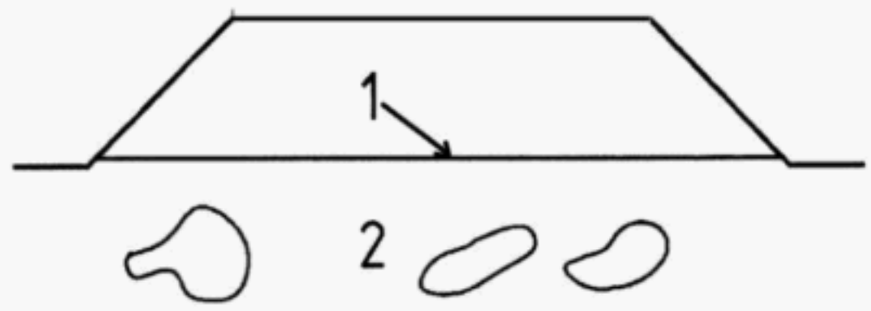

h) Reinforcement over areas prone to subsidence

Key

1 Reinforcement
2 Potential weak zones or voids

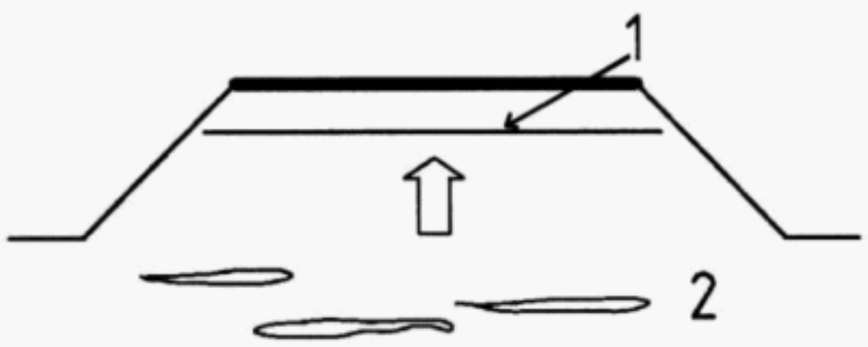

i) Reinforcement in areas prone to frost heave

Key

1 Reinforcement
2 Ice lenses

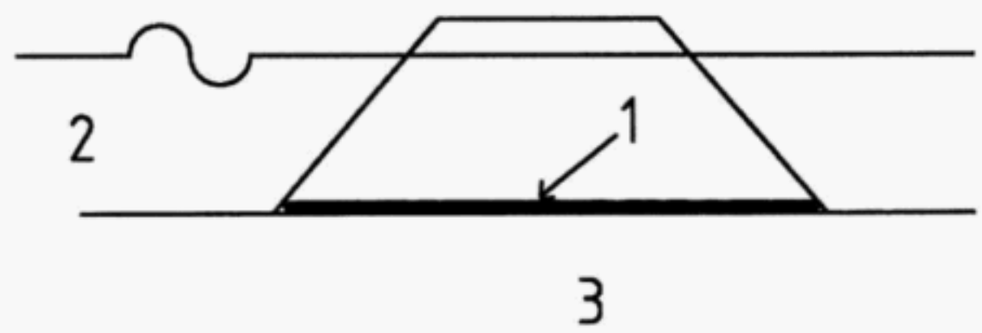

j) Offshore Basal Reinforcement

Key

1 Reinforcement
2 Lake or sea
3 Soft seabed

Figure 1 — Some reinforced fill applications

2 Normative references

The following referenced documents are indispensable for the application of this document. For dated references, only the edition cited applies. For undated references, the latest edition of the referenced document (including any amendments) applies.

EN 206-1, *Concrete – Part 1: Specification, performance, production and conformity.*

EN 1990, *Eurocode – Basis of structural design.*

EN 1991, *Eurocode 1 : Actions on structures.*

EN 1992-1-1, *Eurocode 2: Design of concrete structures - Part 1-1: General rules and rules for buildings*

EN 1997-1, *Eurocode 7: Geotechnical design - Part 1: General rules*

EN 10025-2, *Hot rolled products of structural steels – Part 2: Technical delivery conditions for non-alloy structural steels.*

EN 10025-4, *Hot rolled products of structural steels – Part 4: Technical delivery conditions for thermomechanical rolled weldable fine grain structural steels.*

EN 10079, *Definition of steel products.*

EN 10080, *Steel for the reinforcement of concrete - Weldable reinforcing steel - General*

EN 10218-1, *Steel wire and wire products – General - Part 1 : Test methods.*

EN 10218-2, *Steel wire and wire products - General - Part 2 : Wire dimensions and tolerances.*

EN 10223-3, *Steel wire and wire products for fences - Part 3 : Hexagonal steel wire netting for engineering purposes.*

EN 10223-4, *Steel wire and wire products for fences - Part 4 : Steel wire welded mesh facing.*

EN 10244-1, *Steel wire and wire products - Non-ferrous metallic coatings on steel wire - Part 1: General principles.*

EN 10244-2, *Steel wire and wire products - Non-ferrous metallic coatings on steel wire - Part 2: Zinc or zinc alloy coatings.*

EN 10245-1, *Steel wire and wire products - Organic coatings on steel wire – Part 1: General rules.*

EN 10245-2, *Steel wire and wire products - Organic coatings on steel wire – Part 2: PVC finished wire.*

EN 10245-3, *Steel wire and wire products - Organic coatings on steel wire – Part 3: PE coated wire.*

EN 10326, *Continuously hot-dip coated strip and sheet of structural steels – Technical delivery conditions.*

EN 12224, *Geotextiles and geotextile-related products – Determination of the resistance to weathering.*

EN 12225, *Geotextiles and geotextile-related products – Method for determining the microbiological resistance by a soil burial test.*

EN 13251, *Geotextiles and geotextile-related products - Characteristics required for use in earthworks, foundations and retaining structures.*

EN ISO 898-1, *Mechanical properties of fasteners made of carbon steel and alloy steel - Part 1: Bolts, screws and studs (ISO 898-1:1999)*

EN ISO 1461, *Hot dip galvanized coatings on fabricated iron and steel articles - Specifications and test methods (ISO 1461:1999)*

EN ISO 2063, *Thermal spraying - Metallic and other inorganic coatings - Zinc, aluminium and their alloys (ISO 2063:2005)*

EN ISO 10320, *Geotextiles and geotextile-related products – identification on site (ISO 10320:1999).*

ENV ISO 10722-1, *Geotextiles and geotextile-related products - Procedure for simulating damage during installation - Part 1: Installation in granular materials (ISO 10722-1:1998)*

标准分享网 www.bzfxw.com 免费下载

EN ISO 12957-1, *Geosynthetics - Determination of friction characteristics - Part 1: Direct shear test (ISO 12957-1:2005)*

EN ISO 13431, *Geotextiles and geotextile-related products - Determination of tensile creep and creep rupture behaviour (ISO 13431:1999)*

3 Terms and definitions

For the purposes of this European Standard, the following terms and definitions apply.

3.1

fill

natural or man made material formed of solid particles, including certain rocks, used to construct engineered fill

3.2

reinforcement

generic term for reinforcing inclusions placed within fill

3.3

engineered fill

fill which is placed and compacted under controlled conditions

3.4

reinforced fill

engineered fill incorporating discrete layers of soil reinforcement, generally placed horizontally, which are arranged between successive layers of fill during construction

3.5

fill reinforcement

reinforcement which enhances stability of the reinforced fill mass by mobilising the axial tensile strength of the fill reinforcement by soil interaction over its total length

NOTE It is typically in the form of a strip, sheet, rod, grid or mesh and is usually placed in discrete layers.

3.6

geosynthetics

for the purpose of this European standard “geosynthetics” stands for “geotextiles and geotextile related products”

3.7

facing

covering to the exposed face of a reinforced fill structure which retains the fill between layers of reinforcement and protects the fill against erosion

3.8

foundation

foundation of a reinforced fill structure is the total area of the surface upon which the lowest layer of reinforcement is installed

3.9

discrete facing unit

partial height facing unit used to construct incrementally a reinforced fill structure

3.10

full height facing unit

facing unit equal to the height of the face of the structure

3.11

hard facing unit

panel or block usually of precast concrete with intrinsically low vertical compressibility and high bending stiffness. (See C.2.1 for guidance)

3.12

deformable facing unit

preformed steel grid section, a preformed solid steel section or a rock filled gabion with intrinsically vertical compressibility and low bending stiffness. (See C.2.2 for guidance)

3.13

soft facing unit

soil fill encapsulated in a geogrid or a geotextile facing with no bending stiffness. (See C.2.3 for guidance)

3.14

facing system

assemblage of facing units used to produce a finished reinforced fill structure

3.15

rigid facing system

facing system with no capacity to accommodate vertical differential settlement between fill and facing. (See Annex C for guidance)

3.16

semi-flexible facing system

facing system with some capacity to accommodate differential settlement between fill and facing

3.17

flexible facing system

pliant, articulated, facing system with capacity to accommodate differential settlement between fill and facing

3.18

green facing

vegetative cover or infill used without facing units or as an adjunct to reinforced fill structures constructed using facing units

3.19

cladding

false facing added in front of the facing to improve the aesthetics of a finished reinforced fill structure

3.20

design life

service life, in years, required by the design

3.21

temporary structures

structures with a design life of 1 - 5 years (Class 1)

3.22

permanent structures

structures with a design life of more than 5 years (Class 2 – 5)

标准分享网 www.bzfxw.com 免费下载

4 Information needed for construction

4.1 Prior to commencement of any construction work all information necessary for the construction of the works in compliance with the design and contract documents shall be provided.

4.2 Information shall include definition of the reporting procedure to deal with unforeseen circumstances, or with any conditions revealed or considered during construction which appear to be worse than those assumed in the design.

4.3 Information shall include definition of the reporting procedure if an observational method of design is adopted or monitoring is required.

4.4 Notice of any restrictions such as any construction phasing required by the design, any restrictions on site access, any environmental restrictions or any statutory restrictions on the site shall be provided.

4.5 For works to be constructed to specified levels, co-ordinates and tolerances these shall be shown on plans, or in the specification, together with the positions, levels of and co-ordinates of fixed reference points at or near the works construction site.

4.6 When relevant a schedule of any testing and acceptance procedures for materials incorporated in the works shall be provided.

4.7 When samples of reinforcements are to be installed for the assessment of their long term degradation, or pull-out capacity, detailed instructions with regard to their location, identification and installation shall be provided.

4.8 To avoid damage to existing or proposed services the accurate location of all services such as electricity, telephone, water, gas, drains and sewers shall be ascertained.

4.9 If the site is subject to tidal working or flooding, cold climate conditions or allied restrictions, details of such restrictions shall be ascertained.

5 Geotechnical investigations

5.1 The extent of any site investigation shall be sufficient to allow determination of ground conditions at the site in accordance with the requirements of EN 1997-1 and to enable construction of the works in compliance with the contract documents and design.

5.2 Geotechnical, hydrogeological and hydrological information should be provided to enable the constructor to design any temporary works or accesses needed for construction (e.g. earthworks, embankments, stabilization of excavations or cuttings near the structure, construction of cofferdams.)

5.3 Relevant geotechnical investigation shall be provided to determine the properties of the fill material related to:

workability, in accordance with 6.2.2;

aggressiveness against the reinforcements or the facing, in accordance with 6.2.8;

internal friction and cohesion, in accordance with 6.2.10.

5.4 A geotechnical investigation, in accordance with 6.2.8.1 to 6.2.8.3, shall be provided, when relevant, to determine the aggressiveness of:

foundation material which can be in contact with the reinforcement or facing;

ground water which can soak the selected fill and affect its own aggressiveness.

6 Materials and products

6.1 General

6.1.1 Construction of reinforced fill involves the use of the following major components:

fill material;

fill reinforcement, and if required;

facing system.

All materials and products shall conform to the specifications of the design and with the technical requirements of the suppliers if proprietary systems are used. All materials used shall be mutually compatible.

6.1.2 The source of supply of all materials, fill, reinforcements, facing etc... shall be documented. The source of materials shall not be changed without prior notice.

6.2 Fill materials

6.2.1 General

6.2.1.1 The fill used within the reinforced zone shall be selected to meet the properties required by the design and the project specification.

6.2.1.2 The suitability of a reinforced fill material is dependent on a number of factors that shall be considered when selecting the material:

fill workability;

function and environment of the structure and long term behaviour;

fill layer thickness and maximum particle size;

facing technology;

vegetation;

drainage properties;

aggressivity of the fill;

fill – reinforcement interaction;

fill – internal friction and cohesion;

frost susceptibility.

6.2.2 Fill workability

6.2.2.1 The fill workability shall be such that it can be placed and compacted to produce the properties required by the design.

标准分享网 www.bzfxw.com 免费下载

6.2.2.2 The selection of the fill shall take into account the climatic conditions under which the fill will be placed, the compaction plant and local practice and experience. See Annex A for guidance.

6.2.2.3 Any relevant local experience in the construction of unreinforced embankments shall be considered in the fill selection for reinforced fill structures.

6.2.2.4 Any additives used to improve the workability of some fill materials, e.g. lime, cement, shall be considered with regard to construction limitations. i.e. presence of reinforcement layers within the fill, chemical durability.

6.2.2.5 The fill material shall be free from snow and ice. Frost susceptible materials shall not be placed in sub-zero conditions

6.2.3 Function and environment of the structure and long term behaviour

6.2.3.1 Some types of structure have a critical function where post construction settlement is very important. e.g. bridge abutments, walls supporting railway tracks and buildings, or high earth retaining structures etc. In these cases fill material which is easy to compact and which will have subsequent low compressibility shall be selected. (see Annex A for guidance).

6.2.3.2 Where a structure is exposed to flooding and subsequent rapid drawdown the drainage properties of the fill shall be checked for compatibility with the design assumptions.

6.2.3.3 The behaviour of some fine grained soils, shall be considered with regard to the design life, long term performance and function of the reinforced soil structure. Degradable fill materials and friable soils shall not be used unless specific studies are carried out to validate their use. In particular the properties of materials which are susceptible to break down shall be assessed from trial tests, or tests performed on the material after compaction.

6.2.4 Fill layer thickness and maximum particle size

6.2.4.1 The maximum particle size should allow an acceptably even surface to be formed and be compatible with the compacted layer thickness. The maximum particle size can also be a function of the spacing of the layers of reinforcement and, where relevant, of the size of the facing units.

6.2.4.2 The maximum particle size will also be determined by the choice of reinforcement in order to keep the construction damage within the specified design limits. See 6.2.8.4.

6.2.4.3 The compaction equipment used close to the facing of the structure is generally required to be lighter than within the body of the fill (unless specified otherwise by the soil reinforcement system). This may result in thinner compacted layers, to achieve the required fill density.

6.2.4.4 Unsuitable fills such as organic soils, soluble materials and strongly swelling materials shall not be used.

6.2.5 Facing technology

6.2.5.1 The compatibility of compaction induced settlement and post construction settlement with the facing system used shall be considered when the fill is selected. See Annex A and C for guidance.

6.2.6 Vegetation

6.2.6.1 When a vegetative cover on the facing (greened surface) is planned, the fill material placed near the front of the construction shall meet specified requirements for vegetative cover.

6.2.7 Drainage properties

6.2.7.1 When using drainage geosynthetics the drainage and filtration properties of the geosynthetic shall be compatible with the selected fill.

6.2.8 Aggressivity of the fill

6.2.8.1 The electro-chemical, chemical and biological aggressivity of the fill materials shall be considered to ensure that these properties do not have a detrimental effect on the performance of the reinforcement or the facing.

6.2.8.2 The assessment of the electrochemical, chemical or biological suitability of the selected fill in regard to the reinforcements shall be based on previous relevant experience, e.g. established correlation between the soil characteristics and the long term strength losses of the reinforcements.

6.2.8.3 The mechanical aggressivity of the fill materials with regard to the reinforcement or facing shall be considered to assess compatibility with the design assumptions.

6.2.8.4 The assessment of mechanical damage of the reinforcements, or their coatings, caused by the selected backfill during construction shall be based on previous relevant experience where available, or on specific site testing where necessary. This is particularly important where crushed, angular, fill is used.

6.2.9 Fill reinforcement interaction

6.2.9.1 The interaction between the fill and the reinforcement shall be considered to assess compatibility with the design assumptions.

6.2.9.2 The assessment of the fill reinforcement interaction should be based on testing such as shear box or pull-out testing, and/or previous relevant experience where available.

6.2.10 Fill internal friction and cohesion

6.2.10.1 The compatibility of the internal friction and cohesion of the selected fill with the design assumptions shall be considered.

6.2.10.2 The assessment of the internal friction and cohesion of the fill shall be representative of the conditions in which it is used (e.g. density, moisture content, stress level).

6.2.10.3 The assessment of the frictional properties of free draining or granular fill materials (as defined in Annex A for guidance) may be based on previous relevant experience and related to the particle size distribution of the material.

6.2.11 Frost susceptibility

6.2.11.1 Where relevant, non frost susceptible material shall be used to a thickness of the frost depth from any surface exposed to sub-zero temperatures unless an insulating layer is used.

6.2.12 Guidance

Some typical combinations of fill, reinforcement and facing units are considered in Annex A. The electrochemical properties of fills used with metallic reinforcement are considered in Annex B.

标准分享网 www.bzfxw.com 免费下载

6.3 Reinforcement products

6.3.1 General

6.3.1.1 Fill reinforcements can be made from metals, generally steel, or polymeric materials. See Annex D for some typical examples.

NOTE Fibre glass and carbon fibre reinforcement has been used experimentally and natural fibres have been used in temporary structures.

6.3.1.2 Reinforcement shall only be used if its suitability, including durability, has been proven by trials, or experience, and by approved tests, carried out on the product or on a similar product of the same class of material and whose properties are known to be equivalent, to ascertain that the requisite properties of the reinforcement are likely to be available at the end of the specified design life in the design operating conditions.

6.3.1.3 All fill reinforcement products shall conform to the specification for the works as required by the design.

6.3.2 Steel fill reinforcement

6.3.2.1 Steel reinforcement (Figure D.1) may take the form of either strips, bars & rods to EN 10025-4, EN 10025-2 or EN 10080, ladders, welded wire meshes (also known as grids, or bar mats) to EN 10080 or woven wire meshes to EN 10218 and EN10223. They should generally have one end connected to a facing, at spacing prescribed by the design. Steel reinforcement may be provided with a protective coating to mitigate the effects of electro-chemical corrosion. Some typical examples of widely used steel reinforcements are considered in Annex E.

6.3.2.2 Steel strips, rods, bars, ladders or welded wire meshes may be provided with a galvanizing coating. The galvanizing shall conform to EN ISO 1461 with a local coating thickness of 70 µm. Thin strips may be galvanised in accordance with EN 10326, with a local coating thickness of 35 µm. A corrosion allowance shall be applied to the base metal appropriate to the design life.

6.3.2.3 Steel woven wire meshes may be provided with a zinc-aluminium alloy coating (Zn95Al5), minimum 30 µm thick further protected by a 0,5 mm thick PVC or PE coating. The zinc-aluminium coating shall conform to EN 10244-2.

6.3.2.4 Stainless steel or aluminium alloys should not be used for soil reinforcement in permanent structures unless for particular cases and based on specific studies.

6.3.3 Polymeric reinforcement

6.3.3.1 Polymeric reinforcement can take many forms, (Figure D.2), such as strips, grids or sheets which may not be connected to a facing. Like steel strips, polymeric strips shall be installed at predetermined vertical and horizontal spacing required by the design. In contrast, only vertical spacing shall be specified for grids or sheets installed as full width reinforcement. The most commonly used polymers are polyester and polyolefins, although other geosynthetic materials may be used.

6.3.3.2 All geosynthetic fill reinforcement shall conform to the requirements of EN 13251, as far as tests and testing procedures are relevant in regard to the particular form of the reinforcement.

6.3.3.3 As required by the design, polymeric fill reinforcement in the form of strips, grids or sheets shall be provided with certified values of design strengths pertaining to the specified design life and operating temperature of the reinforced fill structure and, based on tensile creep rupture and isochronous load-strain characteristics per EN ISO 13431.

6.3.3.4 Unless they are based on previous relevant experience and/or specific testing as per clauses 6.2.8.2, 6.2.8.4 or 6.2.9.2, the certified values of the design strengths of polymeric fill reinforcement shall be

based on construction induced damage as ENV ISO 10722-1, fill reinforcement interaction as EN ISO 12957-1, and durability as EN 13251, Annex B, including a consideration of resistance to weathering per EN 12224 and possibly of microbiological attack per EN 12225

6.4 Facings

6.4.1 General

6.4.1.1 Facings can be produced in a variety of materials and configurations with a variety of facing-reinforcement connections and a variety of joint fillers and bearing devices.

6.4.1.2 All facings systems and facing units, including connections between facings and reinforcement and jointing materials, when these are needed, shall conform with the specification for the works and exhibit the long term properties required by the design.

6.4.1.3 The facing system shall enable construction within specified tolerances of vertical and horizontal alignment and should perform within specified tolerances of vertical and horizontal alignment over the design life.

6.4.1.4 The facing system should be able to sustain differential settlements required by the design without structural damage to the facing.

6.4.1.5 When vegetation is to be used the face shall provide a suitable medium for the establishment and continued growth of the vegetation.

6.4.1.6 For a vegetated face several interrelated aspects need to be considered, including, the climate, site location, aspect, altitude, amount and frequency of precipitation, exposure, form of facing, erosion resistance capability.

6.4.1.7 Any open joint between the facing units shall be either filled, overlaid with a continuous filler or cover joint, or protected in some other way so as to prevent any leakage of the fine particles of the fill material at the back of the facing. The jointing material shall be pervious unless otherwise required by the specification for the works.

6.4.1.8 Guidance.

Examples of facing systems are described in Annex C.

6.4.2 Prefabricated concrete units (Concrete panel, segmental block wall)

6.4.2.1 Care shall be taken with the selection of the materials used in the production of the facing units and the precision with which they are manufactured, since they affect the performance of those facing units, in terms of achievable construction tolerances and durability

6.4.2.2 All units shall be free of cracks or defects that would interfere with the proper placing of the unit or significantly impair the strength or permanence of the structure. Concrete panels shall conform to EN 1992 or EN 1990, Section 5, if based on tests.

6.4.2.3 Compressibility of filler or bearing pads should be consistent with the compressibility of the retained fill.

6.4.2.4 Guidance.

Specifications for typical examples of widely used concrete units are considered in Annex F, for guidance.

标准分享网 www.bzfxw.com 免费下载

6.4.3 Steel facing units (Welded steel mesh facing, Woven steel mesh facing and gabions, Semi -elliptical steel facing)

6.4.3.1 Guidance.

Specifications for typical examples of widely used steel facing units are considered in Annex E, for guidance.

6.4.4 Geosynthetics facing units

6.4.4.1 All geosynthetics used for the construction of wrapped or bagged facing units or gabion baskets, shall conform with EN 13251.

6.4.5 Properties of facing systems

Facing systems shall conform to the standards specified in Table 1.

Table 1 — Relevant standards for requirements to facing systems

REQUIREMENTS	FACING SYSTEMS					
	Concrete panel	Segmental block wall	Welded steel mesh facing	Woven steel mesh facing and gabions	Semi elliptical steel facing	Wrap around facing
Concrete quality	EN 206	EN 771-3				
Steel reinforcement (in panel)	EN 10080/ EN 1992-1-1					
Dimension tolerances	a	a				
Compressive strength at installation	a	a				
Surface quality	a	a				a
Steel quality			EN 10079/ EN 10080	EN 10218-1&2 EN 10223-3	EN 10025-2	a
Galvanizing quality			EN ISO 1461	EN 10244-1&2	EN ISO 1461	
Organic coating quality				EN 10245-1,2&3		

a: Requirements are needed but no relevant standard is available

7 Design considerations

7.1 General

7.1.1 The design shall produce contract documents to enable works to be constructed which fulfil the specified requirements with respect to safety, serviceability, economy and durability, taking into account the expected service life.

7.1.2 The design of reinforced fill structures shall be based on EN 1990 and EN 1991. Since EN 1997-1 does not presently cover the detailed design of reinforced fill structures, the design of these structures shall currently be carried out using national standards. See Foreword for further comments.

7.1.3 The reinforced fill technology shall be compatible with the method of construction and be selected at the design stage.

7.1.4 The design shall enable construction to be achieved within realistic tolerances. Generally speaking reinforced fill structures as such are flexible and can deform during and after construction. The design should, therefore, take into account reasonable construction tolerances in regard to vertical and horizontal alignments, levels and layout. Special consideration should be made to allow for necessary deformations when reinforced soil structures are combined with or located adjacent to rigid structures.

7.1.5 A design brief shall be prepared which details the works to be constructed, the scope of the work carried out in the design, the required design life and any hazard associated with operation of the works.

7.1.6 When some latitude is left in the selection of the materials or systems to be used, the design brief should emphasise the particular requirements of the project that shall influence the final selection decision.

7.1.7 Possible consequences of failure, in terms of risk to life, potential economic losses and inconvenience including disruption of services, shall be taken into account early in the design stage, in accordance with the categories given in EN 1997-1.

7.2 Additional Design Considerations

7.2.1 Loading conditions, including accidental loads and transient loads during construction, climatic effects and hydraulic conditions, shall be taken into account for both permanent and temporary reinforced fill structures. This also includes seismic loads in seismically active areas.

7.2.2 The effects of permanent and temporary reinforced fill structures on any adjacent structures shall be taken into account.

7.2.3 Hydraulic conditions shall include the effects of hydraulic loading and effects on durability arising from any contact with water or contaminants.

7.2.4 Consideration shall be given to the ability of the reinforced fill structure to tolerate anticipated magnitudes of total and differential settlement, frost heave, deformation and movement. Where necessary, such settlements, deformations and movements of reinforced fill structures shall be monitored as the construction progresses, for comparison with the predictions (see 7.4.5).

7.2.5 Where appropriate special consideration shall be given to drainage during the construction phase.

7.2.6 Consideration shall be made of any restrictions on construction such as environmental conditions, including noise and vibration, tidal working, climatic conditions and any phasing of construction.

7.2.7 Where the origin and properties of the fill materials to be used are not known at the design stage the design assumptions shall be stated in the design documents.

标准分享网 www.bzfxw.com 免费下载

7.2.8 For reinforced fill structures with a vegetative cover on the facing the special construction guidelines of the supplier of the facing system should be considered to ensure permanent vegetation.

7.3 Design amendments

7.3.1 Amendments may be necessitated by either unforeseen conditions or planned modifications arising out of use of an observational method.

7.3.2 Amendments necessitated by unforeseen circumstances, such as changes in ground or hydraulic conditions, shall be reported immediately in accordance with clauses 4.2 and 4.3.

7.3.3 If the construction activity requires a change to the structure as defined in the design documents then this shall only be carried out after the design has been checked and modified accordingly.

7.4 Observations during construction

7.4.1 The observations during construction shall conform to EN 1997-1 (clause 2.7)

7.4.2 Where required information arising out of observations during construction or from monitoring shall be promptly reported.

7.4.3 Where a reinforced fill structure is to be placed on a slope or a ground with underlying rock, the exact delineation of the rock head shall be reported to enable final design of excavation, facing (where relevant), reinforcement lengths and spacing, to be completed.

7.4.4 Where a reinforced fill structure is to be placed on top of an anchored or soil nailed structure, the exact delineation of the anchors or soil nails shall be reported to enable final design of excavation, facing (where relevant), reinforcement lengths and spacing, to be completed.

7.4.5 Where significant consolidation and settlement of the foundation soil is expected, the reinforced fill structure may have to be built in more than one phase. The movements (and, where applicable, the pore pressure) shall be monitored as the construction progresses and reported as specified, for comparison with the predictions. The computation of the anticipated final settlements, as well as the design of the upper courses of the structure, shall be completed as soon as sufficient data is available.

7.4.6 Where settlements are expected the construction of any superimposed structures, including copings, may be delayed until future anticipated settlements fall within the settlement tolerances of superimposed structures. Where the superimposed structures will produce significant additional load the reinforced soil structure may be surcharged to the future load level.

7.5 Design output

The design output shall contain the required geometry of the structure to be built, relevant specification of materials or products assumed in the design together with any further details such as phasing of the works. Table 2 lists possible aspects of the design output.

Table 2 — Some possible aspects of design output

DETAIL	SPECIFICATIONS
General	Geometry including plan view typical cross sections elevation with layout Drainage Construction phases Monitoring Level of control Construction tolerances Climatic condition
Retained fill	Physical properties : - unit weight ; - particle size distribution (D_{max}, Uniformity Coefficient) - friction angle and cohesion at design stress levels ; - water content ; - water and frost susceptibility, where appropriate.
Selected fill	Physical properties: - maximum and minimum unit weight, Proctor density ; - particle size distribution and / or friction angle and cohesion at design stress levels ; Electrochemical, chemical and biological properties ; - minimum soil resistivity ; - minimum/maximum pH ; - maximum chloride and sulphate contents ; - maximum organic and sulphide contents. Frost susceptibility, where appropriate ; Placement requirements ; - maximum dry density ; - moisture content ; - layer thickness ; - installation method.
Reinforcement	All types of reinforcement : - type and configuration, laying direction, seams and connections ; - short term design strength ; - long term design strength ; - fill/reinforcement interaction ; - mechanical damage related to fill particle size and angularity ; - structural layout ; - installation of test samples ; Steel reinforcement - grade ; - type of coating. Geosynthetic reinforcement - creep behaviour in accordance with EN ISO 13431.
Facing and connections	Type and shapes Aesthetic requirements Performance level of facing Performance level of reinforcement/facing connection Maximum wind speed for erection of large panels
Top soil for greened faces	Physical properties : - particle size distribution ; - contents of organic material. Chemical properties : - minimum/maximum pH Hydraulic properties : - capacity of water retention.

标准分享网 www.bzfxw.com 免费下载

8 Execution

8.1 Receipt and quality control of materials

8.1.1 All prefabricated facing units or palettes of modular blocks, all batches or rolls of reinforcements shall be identified with unambiguous marks or labels, conforming to the denominations used on the plans. Geosynthetic materials shall conform to EN ISO 10320.

8.1.2 The details of each roll or batch of reinforcement delivered to the site shall be checked against the materials specified and the serial numbers shall be recorded and retained.

8.2 Handling and storage

8.2.1 A suitable storage area of sufficient dimensions shall be prepared to allow the unloading, loading, storage and moving of all reinforcing and facing materials, and accessories delivered to the site, without damage occurring.

8.2.2 Handling and storage of reinforcing and facing materials shall be carried out with care and in accordance with the project specifications. The relevant recommendations of the supplier or manufacturer should be also complied with.

8.2.3 Items having different sizes or physical characteristics should be stacked separately.

8.2.4 Reinforcing and facing products take many different forms. Where the above requirements do not apply to a particular product, further advice may be sought from an approving body, the supplier or the manufacturer.

8.3 Preparation of the site and foundation

8.3.1 General

8.3.1.1 The foundation shall be constructed to the levels and falls in accordance with the requirements of the design.

8.3.1.2 The preparation shall be carried out in accordance with the design and the specific environment of the structure and includes, if required, the construction access for plant and machinery, the excavation required to clear the area and the cleaning, levelling and treatment of the foundation.

8.3.1.3 If the soils encountered during the preparation works do not correspond with the design this shall be reported immediately.

8.3.1.4 Where vertical drains are to be installed beneath any type of reinforced fill structure, from some intermediate fill level, care shall be taken to ensure that the thickness of fill placed is adequate to safely bear the loads imposed by the construction plant. Additionally, installation of vertical drains shall not induce damage in the underlying reinforcement in excess of that already allowed for in the design.

8.3.1.5 Where reinforcement to any type of reinforced fill structure is to be placed over piles then, unless otherwise specified, consideration should be given to chamfering the edges of pile caps and/or covering the pile caps with a layer of fill to prevent damage to the reinforcement.

8.3.2 Earth retaining structures and reinforced slopes

8.3.2.1 Unsuitable materials shall be removed from the area to be occupied by the reinforced fill structure. All elements that might damage the reinforcements shall be removed from the foundation area. Depending on the case all organic matter, vegetation, slide debris and other unstable materials shall be stripped off and the sub-grade compacted before the placing of any fill material. Soft spots should be removed and replaced with well graded and compacted fill.

8.3.2.2 In the case of earth retaining structures with hard facing units a trench excavation, stepped like the foundation platform, should be provided at the foundation level for a levelling pad beneath the facing. This levelling pad is not a structural foundation but temporary works to aid alignment and facilitate the erection of the facing units. It should be formed in-situ of thin, mass, unreinforced concrete.

NOTE Mass concrete may be replaced by gravel under thick facings such as modular blocks, sloping panels or planter boxes. Such levelling pads are not usually required for soft or flexible facing units.

8.3.3 Embankments with reinforcement at the base

8.3.3.1 On vegetated sites, only substantial vegetation such as bushes or trees shall be cut down to be level with the natural ground level. Debris likely to cause puncturing or other mechanical damage to the reinforcement should be removed from the areas prepared to receive the reinforcement. Root systems of felled trees or bushes and vegetation giving ground cover may be left in place. Organic material will decay and consideration should be given to the long term effects of substantial deposits if they are to be left on the site.

8.3.3.2 On sites known to have a desiccated crust care shall be taken not to rupture this crust during site preparation and initial filling unless otherwise specified in the design.

8.3.3.3 Before placement of the reinforcement commences all abrupt changes in ground profile shall be evened out by placement and compaction of a regulating layer of suitable fill. The fill of the regulating layer and any geosynthetic separator between the ground and the fill shall not impair any dissipation of pore water pressure from the foundation soil.

8.4 Drainage

8.4.1 Drainage of earth retaining structures

8.4.1.1 If the foundation of the structure is not free draining, a longitudinal drainage trench, or a porous or open jointed drainage pipe of suitable size, or a geocomposite drain shall be placed at the base of the structure to collect water and bring it to the site drainage system. Any facing shall allow water to pass through to this drain if it is located in front of the facing. The omission of joint filler from the vertical joints in the embedded depth of panel facings can normally allow water to pass through the facing without the need for weep holes.

8.4.1.2 Where water flow is expected from the retained soil drainage trenches or geocomposite drains shall be placed at intervals along the wall.

8.4.1.3 In cases of significant water flows a drainage blanket of sufficient thickness, or a geocomposite, shall be constructed below the reinforced fill wall and discharged beyond the toe. If required this blanket may be continued up along the face of the temporary excavation.

8.4.1.4 Any drainage material shall be designed to avoid loss of reinforced fill or adjacent soil into the drain

8.4.1.5 Special drainage considerations shall apply to partially or temporarily submerged reinforced fill structures

标准分享网 www.bzfxw.com 免费下载

8.4.2 Drainage of reinforced slopes

8.4.2.1 Drainage considerations for reinforced slopes shall follow the procedures detailed in 8.4.1. In addition it may be necessary to ensure that rainfall falling on the face of the slope does not lead to washout.

8.5 Construction of earth retaining structures and reinforced slopes

8.5.1 General

8.5.1.1 The construction procedure of all earth retaining structures and reinforced slopes shall conform with the requirements which are common to all types of reinforced fill structures, as itemized in this section.

8.5.1.2 In addition, the construction procedure should conform with the recommendations which are specific to the relevant type of reinforced fill structure, as set out in the instructions provided by the supplier of the reinforcement and of the facing system, if applicable. Examples are given in Annex C.

8.5.1.3 The construction of all reinforced fill structures shall be executed layer-wise and in stages, where the placing and fixing of the facing elements, if any, and the reinforcement alternates with the deposition, spreading, levelling and compaction of the fill material.

8.5.1.4 If the reinforced fill structure has different foundation levels construction should usually start at the lowest foundation level.

8.5.2 Placement of facing

8.5.2.1 For all facing systems, special construction arrangements, adequate temporary bracing systems, such as props, wedges, clamps, steel angles etc, or formwork shall be used. At every stage of the construction, it shall be ensured that any new course of facing is stable while additional layers of backfill are placed and compacted behind or above it, before it can be effectively held back by the reinforcements.

8.5.2.2 All temporary bracing systems or formwork with the exception of lost formwork shall be removed as soon as they are no longer necessary.

8.5.2.3 Special construction arrangements shall be used, at every stage of the construction, to ensure that the final geometry is as required by the design and within the specified tolerances. Such arrangements may comprise the adjustment of the facing units to a required horizontal and vertical alignment, batter or slope to compensate for the anticipated gradual deformation of the reinforced fill structure itself but not for settlements or movements of the foundation.

8.5.2.4 The horizontal spacing with respect to overlapping, alignment and level, and the vertical alignment, batter or slope of any new course of facing units or formwork shall be checked and adjusted if needed, during the progression of the construction.

8.5.2.5 Particular attention shall be paid to the horizontal spacing, with respect to overlapping, alignment and level, as well as the vertical alignment, batter or slope of the initial course, as accuracy in this phase helps to ensure a rapid and well aligned construction of the complete structure.

8.5.2.6 Jointing material and bearing pads, if any are required by the design, shall be installed, as any new course of facing units is put in place and secured.

8.5.3 Placement of reinforcements

8.5.3.1 The reinforcement shall be laid on an even surface and connected to the facing, if applicable, using the connection method particular to the facing system as specified by the design.

8.5.3.2 It shall be ensured that the non-rigid reinforcement is tight and that any slack has been removed, in order to minimize any deformation during the mobilization of tensile forces in the reinforcement. This may be achieved by pulling the reinforcement tight and holding in this position while it is covered with fill.

8.5.3.3 Reinforcement should be placed as perpendicular as possible to the facing or to the sloped face unless specified otherwise in the design. A transverse overlap may be used at the junction of adjacent pieces of sheet type reinforcement if specified in the design.

8.5.3.4 In the presence of obstacles such as pipes, columns, piles, manholes etc it may be necessary to skew or shift a reinforcement from its designated location in either the horizontal or vertical direction. For sheet-type reinforcements it may be necessary to cut a hole into the reinforcement. Unless such alterations are explicitly permitted by the design they shall be ratified by the designer.

8.5.3.5 Reinforcement with vertical bends should be placed on a preformed mound of backfill. Sharp bends which affect the reinforcement strength shall be avoided unless allowed for in the design.

8.5.3.6 Reinforcements should extend in one continuous piece in the main load carrying direction. Where joints in that direction are unavoidable, the design shall specify an appropriate on site jointing method. The joints may be formed using methods such as bolting, welding, sewing of geotextiles, bodkin joints, etc. or designed overlaps.

8.5.3.7 Polymeric reinforcement may be prone to degradation when exposed to sunlight and therefore should be covered with fill within a specified time of laying. Where no such time is specified, exposed reinforcement should be covered within 24 hours of placement.

8.5.3.8 In general, the placement of sheet material may be disrupted by wind uplift. Where this is likely, the material should be locally ballasted.

8.5.4 Placement and compaction of fill

8.5.4.1 Placement and compaction of fill shall be executed with great care as the performance of a reinforced fill structure is mainly influenced by the nature of the backfill and the consistent manner in which it is placed and compacted.

8.5.4.2 Prior to the commencement of construction a method for compaction of the fill shall be established which, if specified, may include field trials.

8.5.4.3 Equipment compatible with the proposed method shall be provided to achieve the compaction requirements set up by the design

8.5.4.4 The grading and the moisture content of the fill material shall be checked periodically during construction to assure compliance with the design specifications, especially whenever the appearance or behaviour of the material changes noticeably.

8.5.4.5 The deposition, spreading, levelling and compaction of the fill should be carried out generally in a direction parallel to the facing or the sloped face.

8.5.4.6 Care shall be taken to ensure that the reinforcing elements and the facing, if any, are not damaged during deposition, spreading, levelling and compaction of the fill. No machines or vehicles shall run directly on the reinforcements.

8.5.4.7 All vehicles, and all construction equipment weighing more than 1500 kg shall be kept at least 1m away from the facing or the face of slopes without facing.

8.5.4.8 The thickness of the layers of backfill shall be within the limits specified by the design and such that it allows compaction to the required density. It should be a sub-multiple of or equal to the vertical reinforcement spacing.

标准分享网 www.bzfxw.com 免费下载

8.5.4.9 Specific care shall be taken for the compaction of the fill near the facing, if any, to avoid any damages of the facing elements and the connected reinforcements and to minimize deformations. Special attention shall be paid to confined spaces, such as the corners of a structure.

8.5.4.10 The fill within 1 m of the face may be compacted using adequate light compaction equipment. Where small compaction equipment is used, the thickness of the layers shall be adjusted as needed to obtain the compaction requirements

8.5.4.11 At the end of each day's work the surface of the compacted fill should be left at a slight inclination (2 % - 4 %) away from the facing or the sloped face and sealed with a smooth compactor to ensure that any surface water is guided away to a suitable outlet.

8.5.4.12 The rear of the structure should be backfilled by phasing the work in order to ensure the contemporaneous deposition of the retained fill material.

8.5.4.13 The sequence of fill placement over soft or ultra soft ground may be specified within the design. If not, care should be taken to ensure that the sequence of filling, including any trafficking by construction plant, at no time exceeds the bearing capacity of the underlying ground.

8.5.5 Vegetative cover to the face (greened surface)

8.5.5.1 For permanent reinforced fill structures meant to have a permanent vegetative cover on the facing, the relevant specifications of the design shall be thoroughly met. Moreover, careful attention should be paid to any special construction guidelines of the supplier of the system.

8.5.5.2 If the characteristics of the backfill material are not adequate to support vegetation, suitable topsoil material may be placed at the front face separated from the fill, if necessary, by an appropriate geotextile.

8.5.5.3 The climatic and local conditions (such as site location, cardinal points, aspect, altitude, amount and frequency of precipitation) shall be taken into account, together with the slope angle, since they may influence the choice of a suitable:

soil type in the face area

seed or plant assortment

greening method (hydroseeding, seeded geosynthetics, plants, etc.) or the necessity of artificial irrigation.

8.6 Construction of reinforced embankments

8.6.1 General

8.6.1.1 The construction procedure of all embankments with basal reinforcement and embankments with reinforcement against frost heave in the upper part shall conform to the requirements that are common to all types of reinforced embankments, as itemized in this section.

8.6.1.2 In addition, the construction procedure shall conform to the recommendations that are specific to the relevant type of reinforced embankment, as set out in the instructions provided by the supplier of the reinforcement.

8.6.2 Embankments over weak ground

8.6.2.1 Reinforced embankments with basal reinforcement may include embankments constructed over weak ground. Weak ground may take the form of naturally occurring deposits of predominantly cohesive soil

or ground which has been weakened by man made voids, such as mine workings, or naturally occurring subterranean voids such as sink holes.

8.6.2.2 Several different reinforcing techniques can be used to suit the construction of embankments over weak ground. The precise construction method may depend upon the particular technique employed.

8.6.3 Placement of reinforcement

8.6.3.1 Reinforcement in the form of geosynthetic grids or sheets, or metal grids, meshes or sheets, which may have different tensile strengths and tensile stiffness in different directions, shall be installed in the specified orientation.

8.6.3.2 Reinforcement should be selected to provide the required degree of survivability to construction induced damage at design stage, and should not be exposed to direct trafficking by construction plant.

8.6.3.3 It shall be ensured that the non-rigid reinforcement is tight and that any slack has been removed, in order to minimize any deformation during the mobilization of tensile forces in the reinforcement. This may be achieved by pulling the reinforcement tight and holding in this position while it is covered with fill.

8.6.3.4 Geosynthetic reinforcement may be prone to degradation when exposed to sunlight and therefore should be covered with fill within a specified time of laying. Where no such time is specified, exposed reinforcement should be covered within 24 hours of placement.

8.6.3.5 Geosynthetic reinforcing products are supplied in strips or rolls of limited width and length. Where the dimensions of the area to be reinforced exceed the roll dimensions then specified joints or overlaps will be required.

8.6.3.6 Where joints have been specified, these may be formed in-situ or prefabricated elsewhere prior to final placement. In addition to attaining specified design strengths, joint strengths shall be sufficient to resist loads induced by strenuous handling techniques such as rope hauling.

8.6.3.7 Placement of reinforcement through shallow water will require the weighting of polymeric material with a specific gravity less than unity. Placement through deeper water may additionally require the use of shallow draft vessels or craft using rope hauling technique.

8.6.3.8 In general, the placement of sheet material may be disrupted by wind uplift. Where this is likely, the material should be locally ballasted.

8.6.4 Placement and compaction of fill

8.6.4.1 Placement and compaction of the fill should generally follow the procedures adopted for earth retaining structures and reinforced slopes, except where the fill is placed over deep deposits of soft or ultra soft ground.

8.6.4.2 The sequence of fill placement over soft or ultra soft ground, should be specified within the design. If not, care should be taken to ensure that the sequence of filling, including any trafficking by construction plant, at no time exceeds the bearing capacity of the underlying ground.

8.6.4.3 Where fill is deposited by end tipping extreme care should be taken to ensure that any bow waves formed in the underlying ground do not displace or rupture the reinforcement.

8.6.4.4 Where placement of fill is advanced in the direction of the longitudinal axis of an embankment, development of unwanted bow waves may be reduced by advancing the central section of infilling ahead of infilling along the toes of the embankment.

标准分享网 www.bzfxw.com 免费下载

8.6.4.5 The development of bow waves may be further reduced by limiting the depth of the first layers of fill to the minimum required for trafficking by light low bearing pressure construction plant.

8.6.4.6 For wide embankments, consideration may be given to first placing fill along the two toes of the embankment to form dykes from which subsequent infilling might proceed towards the centre of the embankment.

9 Supervision, testing and monitoring

9.1 Supervision - A suitably qualified and experienced person shall be responsible for checking that the construction complies with the design and all other contract documents.

9.2 Monitoring - Monitoring of all works connected with the execution of various stages of reinforced fill construction shall be in accordance with the method statement made to fulfil the design and the project specification.

9.3 Testing - The testing for reinforced fill structures shall be in accordance with EN 1997-1 or the specifications of the design. The records of any testing shall provide the test method and procedure, test results and the conclusions and relevance to the reinforced fill structure.

9.4 The level of supervision, monitoring and testing shall be in accordance with the specification of the design, see 4.6.

9.5 The type, extent and accuracy of monitoring and testing requirements on and off site should be clearly shown in the specification and organised before work commences on site.

9.6 Unless specified in the Design, supervision should relate to:

a) site preparation : topography, geotechnical data, set-up, geometry of excavations, foundation pad (if applicable);

b) fills : conformity with design: characteristics, placing and compaction, monitoring and testing when necessary;

c) reinforcement : conformity with design, reception, handling, storage, placing, damage during installation, prestressing of reinforcement (if applicable), monitoring and testing when necessary;

d) facing materials : conformity with design, installation of facing elements, alignments and displacements, finishings, monitoring and testing when necessary;

e) drainage : base / foundation, back slope, layer drainage during installation, other drainage systems needed.

10 Records

10.1 Records during construction

10.1.1 If required records shall be made of relevant aspects of the construction including: weather conditions, progress of the works, supervision, tests and observations as specified in clause 9.

10.2 Records at the completion of the works

If required records shall be made of the as-built works including:

records as in 10.1.1 above;

information showing the “as-built” reinforced fill works in full detail especially any changes from the initial drawings and specifications;

details of materials used;

标准分享网 www.bzfxw.com 免费下载

the position of all culverts, fences, underground cables, pipes and the like;

details of the foundation soils and conditions and other relevant geotechnical conditions;

any restrictions concerning surcharge loads which the construction may support;

any special features or precautions that may be necessary if the structure has to be demolished;

details and location of any durability samples installed together with recommendations for the method and times for their extraction and subsequent testing;

any particular recommendations for inspection and maintenance.

Records should be kept after the end of the works for the time period stated in the project specification.

11 Specific requirements

11.1 General

11.1.1 Consideration shall be taken of relevant standards, specifications, or statutory requirements regarding:

security of the site;

safety of the working procedure and;

operational safety of compaction plant, hoisting appliances and other auxiliary plant, equipment and tools.

11.1.2 Particular attention shall be given to all processes requiring men operating alongside heavy equipment and heavy tools. The main risks to be considered include:

moving plant and machinery, primarily lorries, excavator/loaders, compaction plant and drilling rigs;

falling over unprotected edge of wall or steep slope during construction;

lifting and placing of facing panels.

11.1.3 Care shall be taken to ensure that unauthorised persons cannot readily gain access to the site.

11.2 Protection of the environment

11.2.1 Measures shall be taken in order to limit or avoid adverse effects on the environment.

NOTE Attention is drawn to national standards and statutory requirements concerning environmental protection.

11.2.2 The following risks to the environment shall be considered:

induced movement in the ground or adjacent structures;

pollution of surface water and ground water;

unacceptable changes in ground water flow;

air pollution;

noise.

Annex A

(informative)

Typical use of fill types depending on application, reinforcement and facing

Table A.1 — Typical combinations of fills, reinforcements and facings

FILL TYPE		Type 1	Type 2		Type 3		Type 4
		Draining	Granular		Intermediate		Fine
Geomechanical characteristics	% in weight smaller than 80micron	<5%	<12%	12 to 35%	12 to 35%	>35%	Others
	% in weight smaller than 20micron	n.a.	n.a.	<10%	>10%	<40%	
	Plasticity Index	n.a.	n.a.	n.a.	<25	<25	
APPLICATION							
Parts of structure exposed to flooding and/or rapid water draw-down		A	B	B	D	D	D
Structure supporting bridge abutments, railways, buildings		A	A	B	C (a)	D	D
High reinforced fill walls		A	A	B	B	D	D
High reinforced fill slopes		A	A	B	B	C (b)	C (b)
Common walls and slopes		A	A	A	B	C (c)	C (c)
REINFORCEMENT							
Smooth strips or rods (metallic or polymeric)		A	A		C (d)		D
Ribbed strips or rods, ladders (metallic or polymeric)		A	A		B	C (d)	D
Bar mats, ladders, meshes, grids, sheets (metallic or polymeric)		A	A		B	C (d)	D
Draining geosynthetics (in-plane permeability)		B	A		A		C (b)
FACING							
Rigid		A	A		D(a)		D
Semi flexible		A	A		C(e)		D
Flexible		A	A		A	B	C(e)

KEY :

A = Often Used

B = Sometimes Used

C = Subject to Specific Study

D = Not Recommended

NOTES

General The typical combinations above are given for general guidance only and are not intended to be a specification of where various fills or components may be used. The brief descriptions of the fills above are only some of the principle characteristics and do not fully describe a fill. The design documents or a project should specify the particular fills and components which should be used. Fine fill which is too wet of optimum is difficult to compact and likely to cause facings, if used, to go out of alignment during compaction. Fine fill laid and compacted in adverse weather conditions may be problematic. Frost susceptibility should be checked if applied in cold climates.

Specific

a If adequate compaction is not achieved then differential settlements between facing and reinforcements may occur which may overload the connection.

b The effect of the drainage properties on the fill characteristics should be assessed.

c Special attention should be paid to : angle of internal friction, compaction procedure with respect to moisture content and climatic conditions, need for drainage layers.

d The fill-reinforcement interaction should be assessed for long term and during construction conditions

e Special attention should be paid to the control of the alignment of the facing units (if any) during construction.

标准分享网 www.bzfxw.com 免费下载

Annex B
(informative)

Table B.1 - Electro-chemical properties of fills used with metallic reinforcement

STEEL REINFORCEMENTS				Strips,				Welded meshes, ladders, rods		Woven wire meshes	
Criteria based on corrositivity				Non-coated "black" steel	Continuously hot-dip galvanised (35 µm	Hot dip galvanised (70 µm)	Zinc/Aluminium coated (Zn85Al15, thermal spray coated 70 µm)	Non coated black steel	Hot dip galvanised (70µm)	Zinc/Aluminium coated (Zn95Al5, hot dip coated 35µm)	Zinc/Aluminium coated (Zn85Al5, hot dip coated 35µm) + polymer coated (PVC/U or PE, 0.5 mm)
			Notes								
Commonly used sizes				3 to 6 mm	3 mm thick	4 to 6 mm thick		bars Ø8 mm to 12 mm		Wire φ 2 mm to 3 mm	
Usual field of application – Class of structure (related to design life)			(1)	Class 3 or 4	Class 4	Class 4 or 5	Class 4 or 5	Class 4	Class 4 or 5	Class 1	Class 4 for steep slopes up to 70°
Electro-chemical characteristics compatible with routine design			(2)								
ENVIRONMENT	Land based, out of water	pH	(3)	5 to 10	5 to 10	5 to 10	A (9)	5 to 10	5 to 10	5 to 10	3 to 10
		Resistivity Ω cm	(4)	> 1 000	> 1 000	> 1 000		> 1 000	> 1 000	> 1 000	B (7)
		Chlorides Cl ppm	(5)	< 200	< 200	< 200		< 200	< 200	< 200	
		Sulfates SO_4 ppm	(6)	< 1 000	< 1 000	< 1 000		< 1 000	< 1 000	< 1 000	
	In fresh water (8)	pH	(3)	5 to 10	5 to 10	5 to 10	A (9)	5 to 10	5 to 10	5 to 10	3 to 10
		Resistivity Ω cm	(4)	> 3 000	> 3 000	> 3 000		> 3 000	> 3 000	> 3 000	B (7)
		Chlorides Cl ppm	(5)	< 100	< 100	< 100		< 100	< 100	< 100	
		Sulfates SO_4 ppm	(6)	< 500	< 500	< 500		< 500	< 500	< 500	
Non-routine, unusual design											
ENVIRONMENT	Marine environment, or fill of marine origin			Specific study required. Thicker strips or larger bars generally needed			pH 5 to 10 No other requirement	Specific study required. Larger bars generally needed		C	Specific study required
	Industrial waste fills, & environments of high aggressivity			Specific study required				Specific study required		Specific study required	

Key : A — Material not normally used; B — Test not relevant; C — Material not normally applicable

NOTE 1 See EN 1991-1, 2.4. Classes shown here are those most commonly used but are not intended to be restrictive.

NOTE 2 Routine design, common applications in environments of normal aggressivity.

NOTE 3 The measurement of pH should be carried out in all cases according to NF A05-252 Annex C and NF T01-013, test 9 in BS1377, part 3, 1990, or equivalent national standard.

NOTE 4 The measurement of resistivity of a saturated sample should be carried out in all cases according to NF A05-252 Annex B, test 10.4 in BS1377, part 3, 1990, or equivalent national standard.

NOTE 5 The measurement of water soluble chlorides is only required if the resistivity is less than 5000 ohm.cm. If so appropriate methods are detailed in NF A05-252 Annex C and NF T90-009, test 7.2 in BS 1377, part 3, 1990, or equivalent national standard.

NOTE 6 i) The measurement of water soluble sulfates SO_4 is only required if the resistivity is less than 5000 ohm.cm. If so appropriate methods are detailed in NF A05-252 Annex C and NF T90-014, test 5 in BS 1377, part 3, 1990 with the result expressed as SO_3 multiplied by 1.2, or equivalent national standard.

ii) The sulfate content should incorporate 3 times the possible sulfur content S-. The measurement of S- should be carried out if the origin of the fill raises the possibility of its presence. It should be carried out by a competent laboratory using a method such as that given in the Encyclopedia of Industrial Chemical Analysis.

iii) The limit for sulfates content assumes that there are no chlorides. Similarly the limit for chlorides assumes there are no sulfates. For cases where both salts co-exist then the limits may be derived from the equation $(Cl)^{0.86} + 13(SO_4)^{0.32} = k$ with Cl and SO_4 in ppm, $(Cl) \geq 1$, $(SO_4) \geq 5$, and k = 120 for “out of water” conditions, k = 95 for parts of the structures in fresh water.

NOTE 7 Refer to relevant requirements for polymer materials.

NOTE 8 In fresh water or regularly submerged e.g. lower parts of river training walls below frequent flood levels.

NOTE 9 Not normally used in environments of normal aggressivity but if used $5 < pH < 10$. Other tests are not relevant.

标准分享网 www.bzfxw.com 免费下载

Annex C
(informative)

Facing units and systems

C.1 General

C.1.1 Reinforced fill is constructed using successive layers of compacted, selected fill incorporating intervening layers of horizontal or sub-horizontal fill reinforcement placed at spacing required by the design.

C.1.2 Reinforced fill earth retaining structures, with a vertical, battered or inclined face (see Figure C.1), require a facing to retain the fill between the reinforcing layers. Depending on the particular system, certain layers of fill reinforcements may however not be connected to the facing.

C.1.3 On shallow reinforced slopes, facing is generally not necessary. Such slopes are usually protected by vegetation with / without erosion control materials.

C.1.4 The facing can be constituted of either hard units (typically made of concrete), or deformable units (typically made from metal, steel grid or mesh, or gabion baskets), or soft units (typically made from geosynthetic sheets or grids, or woven wire mesh).

C.1.5 Where hard or deformable facing units are used, these serve as a formwork against which the selected fill is placed and compacted. Where soft facing units are used, it is generally necessary to employ temporary formwork to maintain the face alignment during the construction of walls or steep slopes.

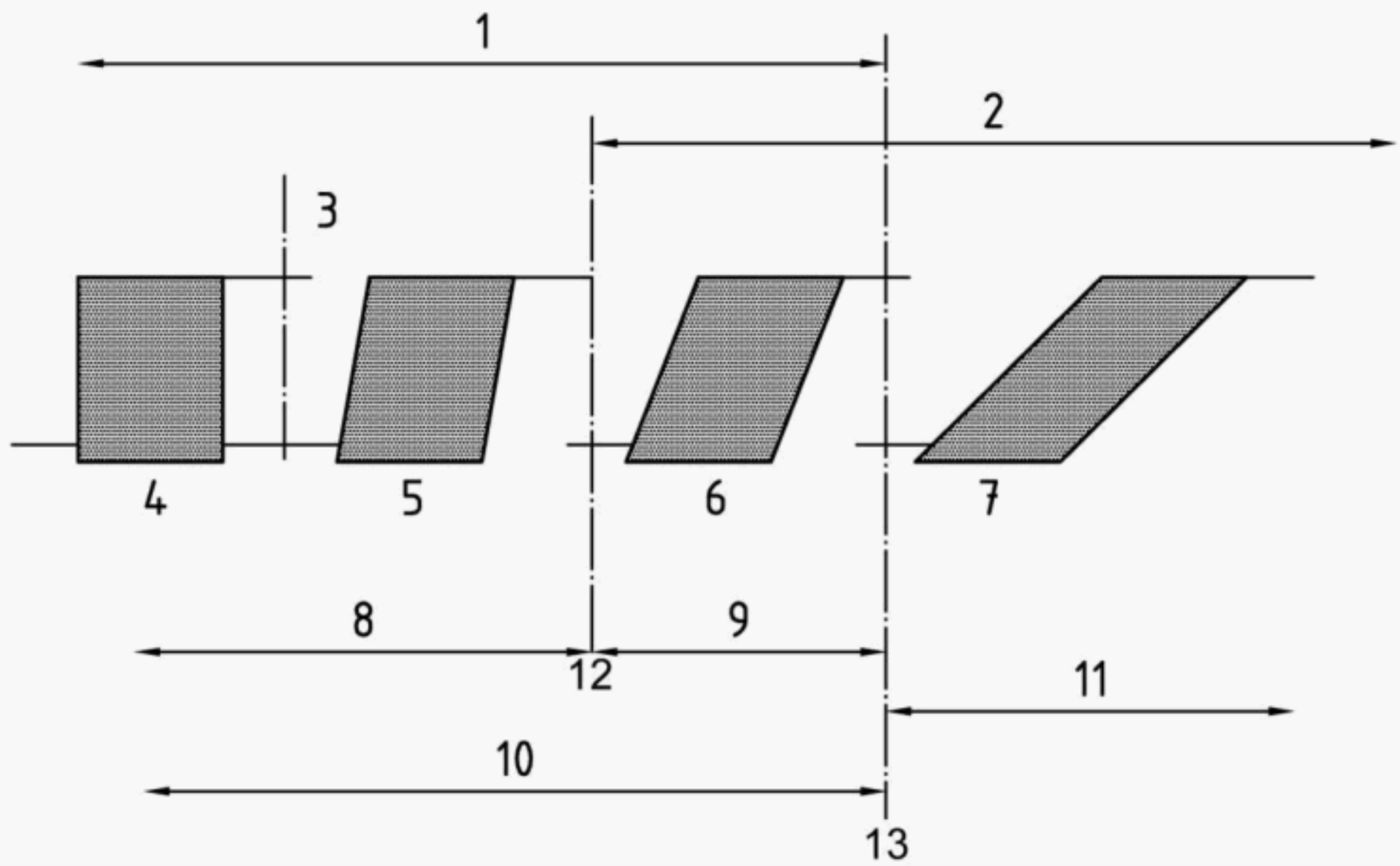

Key

1 Earth retaining structures

2 Reinforced slopes

3 Vertical

4 Vertical wall

5 Battered wall

6 Inclined wall Steep slope

7 Shallow slope

8 Some specific types of facings : panels, blocks, ½ elliptical steel units, gabions

9 Specific types of sloping panel, eg for bulk storage

10 Some common types of facings: planter units, wire mesh, wrapped around

11 No facing, erosion protection may be required

12 Line of 4:1 face slope angle

13 Line of 1:1 face slope angle

Figure C.1

C.2 Facing units

C.2.1 Hard facing units

C.2.1.1 Hard facing units are usually produced in precast concrete, either un-reinforced or reinforced (See Figure C.1).

C.2.1.2 Concrete facing units may be full height panels, partial height panels, sloping panels, planter units, or segmental blocks. Many types of concrete facing units are proprietary and form part of proprietary systems.

C.2.1.3 The reinforcements are connected to the units either by means of devices embedded or inserted into the concrete units, or they are simply clamped between the units.

C.2.1.4 Full height panels : As the name suggests, full height panels (see Figure C.2a) are precast to the required full height of the specific reinforced fill wall to be constructed. The breadth of full height panels is typically in the range 1 to 3 m and the thickness in the range 100 to 200 mm.

标准分享网 www.bzfxw.com 免费下载

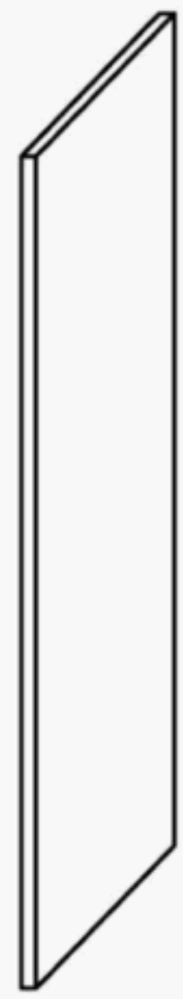

Figure C.2 - Full height panels

C.2.1.5 Partial height panels : Partial height panels (See Figure C.3) are the most common and typically have heights in the range 1 to 2 m and thickness in the range 100 to 200 mm. Distinctive shapes correspond to specific ways of fitting panels together, and to particular construction procedures. Simple rectangular shapes are also available. The panels are fitted with connecting devices embedded into the back face. The edges are usually provided with nibs and recesses, or tongues and grooves.

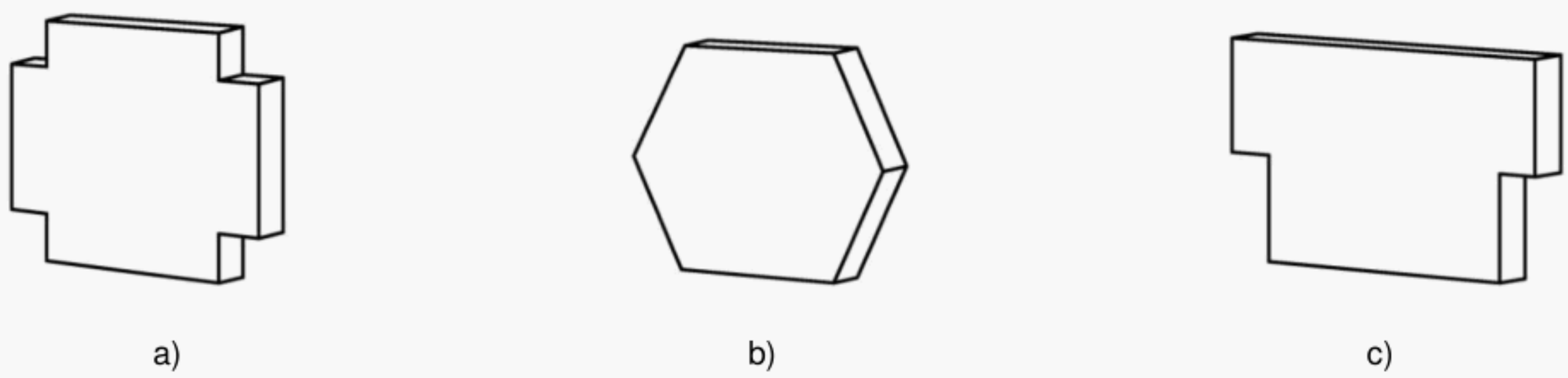

Figure C.3 - Partial height panels

C.2.1.6 Vertical panels with preferred rupture lines can also be used (see Figure C.4).

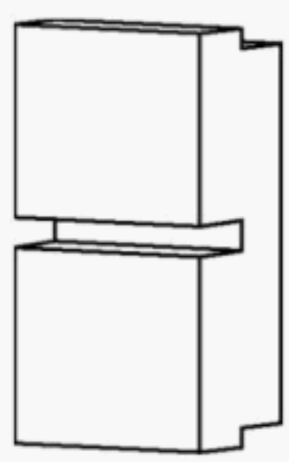

Figure C.4 - Preferred rupture line panels

C.2.1.7 Sloping panels : Sloping precast concrete units (See Figure C.5), equipped with inner buttresses sitting on the compacted fill. The length is usually of the order of 3 m and the height, measured along the slope, of the order of 1,5 m. The inclination is commonly between 50° and 65° to the horizontal. The units are equipped with connecting devices embedded into the buttresses.

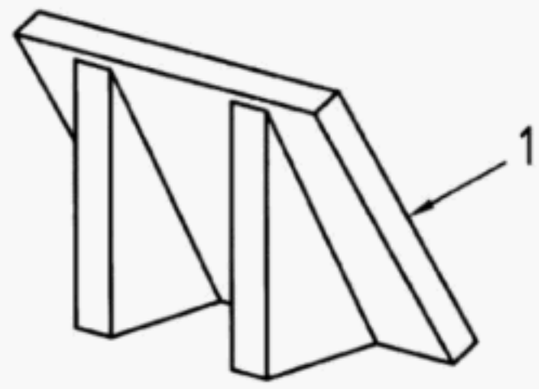

Key

1 Front face

Figure C.5 - Sloping panels

C.2.1.8 Planter units : Precast concrete generally made of a sloping slab (See Figure C.6) supported by outer buttresses or side flanges sitting (partially or totally) on the compacted fill. The length is usually of the order of 2 m and the nominal height between 0,5 and 1 m. The units come with connecting devices embedded at the back.

Key

1 Front face

Figure C.6 - Planter units

C.2.1.9 Segmental blocks : Facing units in the form of precast or dry cast un-reinforced concrete blocks (see Figure C.7) are usually referred to as modular blocks or segmental blocks. Units may be manufactured solid, or with cores. The mass of these units commonly ranges from 20 and 50 kilos. Unit heights typically range from 150 mm to 250 mm, exposed face length usually varies from 200 mm to 500 mm. Depending on the type of reinforcement, blocks may be provided with connecting accessories (pins, rake). Otherwise the reinforcement is clamped between successive courses of blocks.

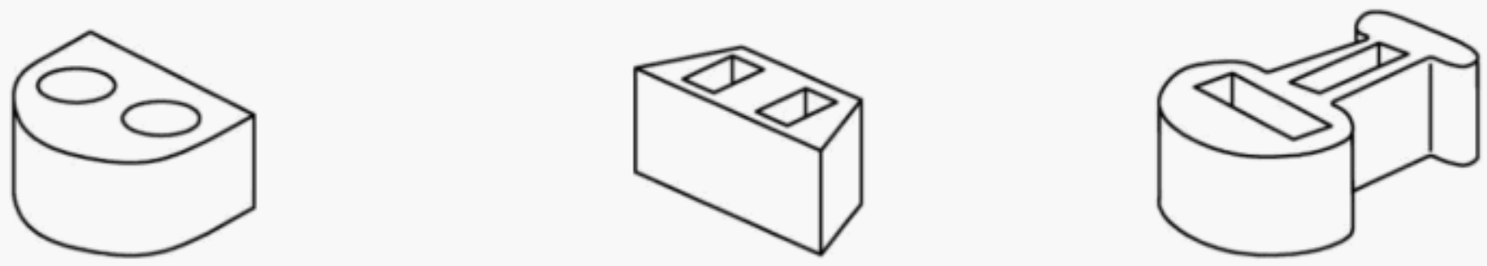

a) b) c)

Figure C.7 - Segmental blocks

标准分享网 www.bzfxw.com 免费下载

C.2.1.10 King post and concrete planking : Horizontal concrete planking slid between universal column posts (see Figure C.8). The reinforcement is usually connected to a bar that slides on the rear flanges of the king posts or clamped between the concrete planks with a lock on the outside face.

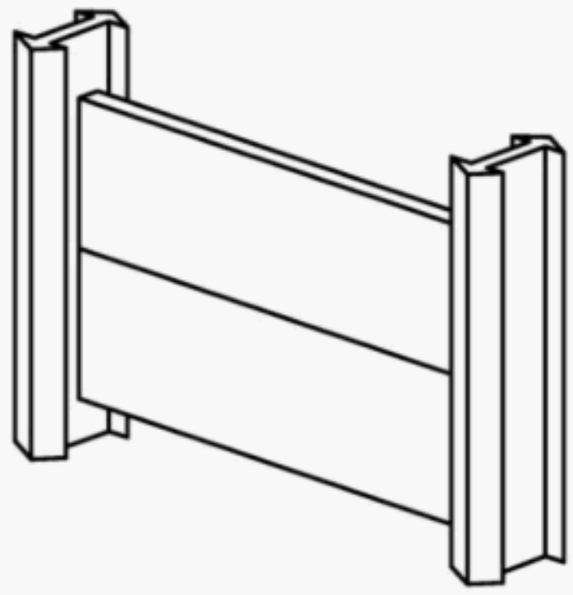

Figure C.8 - King post and concrete planking

C.2.2 Deformable facing units

C.2.2.1 Semi elliptical steel units : facing elements of steel sheet (see Figure C.9) formed into elliptical or U-shaped half cylinders. Such units, placed horizontally, are typically 2 to 4 mm thick, 250 mm to 400 mm high and a few metres long. They are fitted with holes along the horizontal edges for connection to the reinforcements.

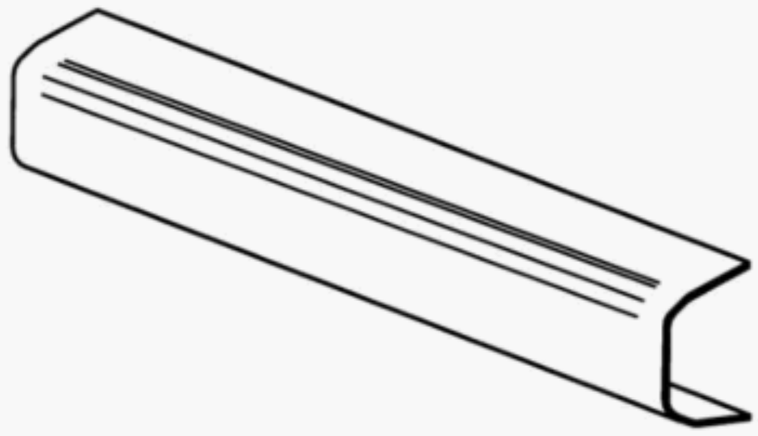

Figure C.9 - Semi elliptical steel units

C.2.2.2 Steel welded wire mesh : Facing units may be formed of open-backed welded wire mesh sections (see Figure C.10), either flat or pre-bent to the required slope angle. These units serve as a formwork during construction. When used for inclined faces, such units may be vegetated to prevent long term erosion of the face. When used for vertical or battered faces, such units may have an inner layer of stone or crushed rock, or be backed with a geosynthetic liner, especially for temporary applications. In some cases such units may be ultimately sprayed with shotcrete, or covered with cast in place concrete. These units may be connected, or not, to the reinforcement. Some types of these facings are proprietary and form part of a system.

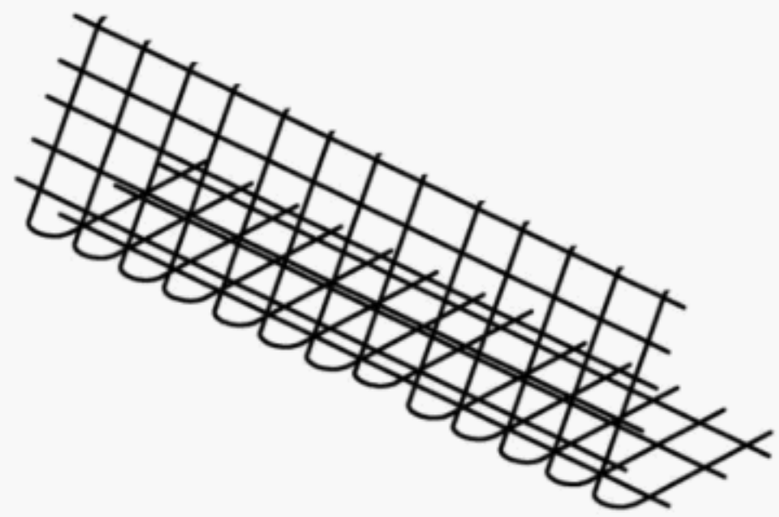

Figure C.10 - Steel welded wire mesh

C.2.2.3 Gabion baskets : Facing units may also be formed using polymeric geogrid or woven steel wire, galvanised or plastic coated, or galvanised welded wire mesh gabion baskets (See Figure C.11) which are filled with stone or crushed rock. The size of such gabion baskets is usually in the range of 0,5 m to 1,0 m in height, 2 m to 3 m in length and 0,5 m to 1,0 m in depth. The gabion baskets may be supplied with an extended tail that forms a frictional connection to the main reinforcement

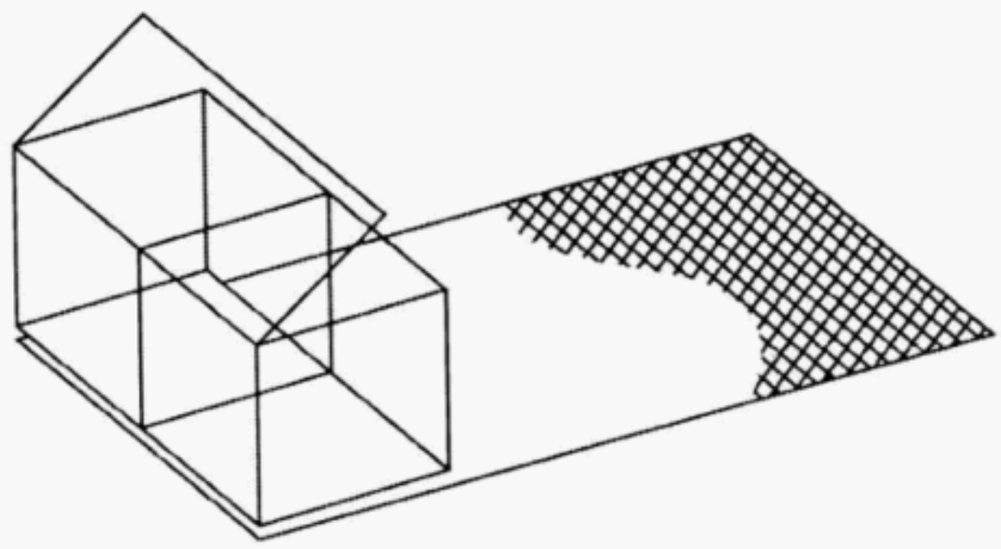

Figure C.11 - Gabion baskets

C.2.2.4 Tyres : Facing units may also be formed with tyres. These tyres are of similar size and are generally stacked in a staggered arrangement to form the facing.

C.2.3 Soft facings units

C.2.3.1 The most widely used soft facing unit is the so called wrapped facing (See Figure C.12) in which full width reinforcement, such as polymeric grid or geotextile, or woven wire mesh, is extended forward from the reinforced fill to wrap around the face of each intervening layer of fill. Where polymeric grids or woven wire meshes are used these may be faced, or backed, with a suitable geotextile to guard against erosion of the face.

C.2.3.2 To construct such slopes to an acceptable alignment it is common practice to use temporary formwork.

C.2.3.3 Alternatively, the facing units may be formed as fabric containers filled with soil. For these so-called bagged facing units it is preferable to encapsulate the facing unit within the main reinforcement as is the case for the simple wrapped facing.

标准分享网 www.bzfxw.com 免费下载

C.2.3.4 In most cases soft facings units are sprayed or seeded to produce a vegetative cover or, rarely, may be sprayed with shotcrete.

Key

1 Bags

Figure C.12 - Soft facing units

C.3 Facing systems

C.3.1 General specifications for facing systems

C.3.1.1 The magnitude of facing deformations during construction, and post construction deformations, will vary from system to system. Therefore, in selecting a particular system care should be taken to ensure that predicted construction and design life deformations will meet specified tolerances. Many systems are proprietary and, to achieve the required construction tolerances, it is important that construction follows recommendations made by the manufacturer.

C.3.2 Differential settlement between fill and facing

C.3.2.1 With all facing systems there is compression of the fill during, and sometimes after, construction which may lead to differential settlement between the reinforced fill mass and the facing. If the fill reinforcement is structurally connected to the facing units, and no allowance is made for such potential differential movement, then additional loads may be imposed on the fill reinforcement. Such deformations and differential movement will be mainly affected by the quality of the selected fill, and the way it is compacted.

C.3.2.2 More stringent specifications should apply to the fill materials used with less flexible facing systems. The facing system should be more flexible if the selected fill is prone to settle or not easy to compact.

C.3.2.3 For flexible facing systems made of soft units, these units deform vertically in sympathy with the settlement of the retained fill. There is therefore little concern about differential movements.

C.3.2.4 For semi-flexible systems made of partial height facing panels, or king post system with reinforcement connected to the concrete units, moderate differential movements are accommodated by the use of compressible bearing pads applied to the horizontal panel joints.

C.3.2.5 For other semi-flexible systems made of deformable facing units, low bending stiffness and vertical compressibility allow the facing units to deform vertically and to accompany moderate settlement of the retained fill.

C.3.2.6 In the case of full height facing panels, relative displacement between the fill, including the embedded fill reinforcement, and the facing may be accommodated by permitting the reinforcements to move relative to the facing panels, thus making the system semi-flexible. Various methods have been considered including the use of slots, vertical poles, compressible lugs. An effective sliding connection should permit the reinforcement to transmit horizontal load and yet slide downwards as filling progresses, without gain in load.

C.3.2.7 For rigid facing systems such as full height panels without such moving connections, and segmental blocks packed without compressible filler, fill reinforcement is usually fixed into the facing panels or blocks. With this arrangement, deformation in the region of the face connections may occur. Additional loads imposed on the connections and fill reinforcements should be mitigated by proper selection, placement and compaction of the fill material.

C.3.3 Longitudinal differential settlement

C.3.3.1 As the height of earth retaining structures may vary along their length, and the compressibility of the underlying foundation soil may also vary, so differential settlement may occur along the length of the wall or slope

C.3.3.2 Semi-flexible and flexible facing systems generally exhibit high to very high tolerance to differential longitudinal settlement.

C.3.3.3 The longitudinal flexibility of semi-flexible facing systems constructed using hard units depends on the aspect ratio of individual facing units and the degree of articulation between facing units afforded by the joint details and packing.

C.3.3.4 Precast concrete panels with an aspect ratio of near unity, e.g. the nominal width and height of the basic panels are similar, offer a high degree of articulation, and thereby a high tolerance to longitudinal differential settlement, provided this is accommodated by appropriate joint detailing and compressible bearing pads placed on horizontal joints.

C.3.3.5 Full height concrete panels, which have a high vertical aspect ratio, and precast concrete horizontal planking, which have a high horizontal aspect ratio, offer a lower tolerance to longitudinal differential settlement.

C.3.3.6 Segmental block systems are normally not provided with compressible packing material on horizontal joints, nor with closely spaced vertical slip joints. So the resistance of segmental block systems to longitudinal differential settlement is usually limited, since it can only result from the small size of the units and their potential displacements relative to each other.

C.3.4 Review of main systems

C.3.4.1 The following tables (Tables C.1 – C.12) assemble brief information about the technology, common applications, performances and tolerances of prevalent systems.

C.3.4.2 The values in the tables are indicative of the construction tolerances which are commonly achieved, or the deformations which are normally withstood without any significant structural damage or any effect on the stability of the structure. They should be understood as follows:

alignment : local variation in comparison with a 4 m long straightedge placed in the outer plane of the wall face

标准分享网 www.bzfxw.com 免费下载

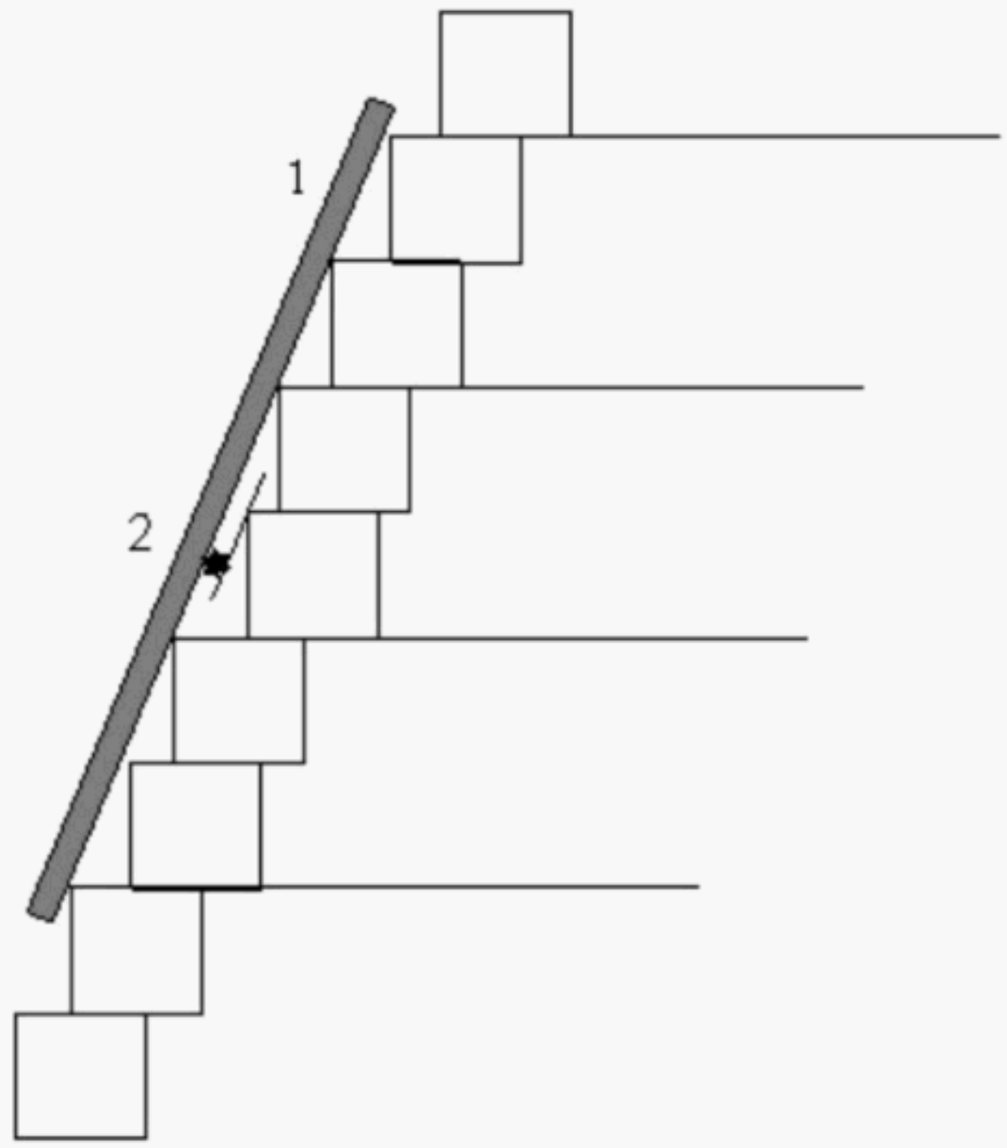

Key

1 Straight edge
2 Local variation

Figure C.13 - Cross section through wall

longitudinal differential settlement : ratio ΔS / ΔL

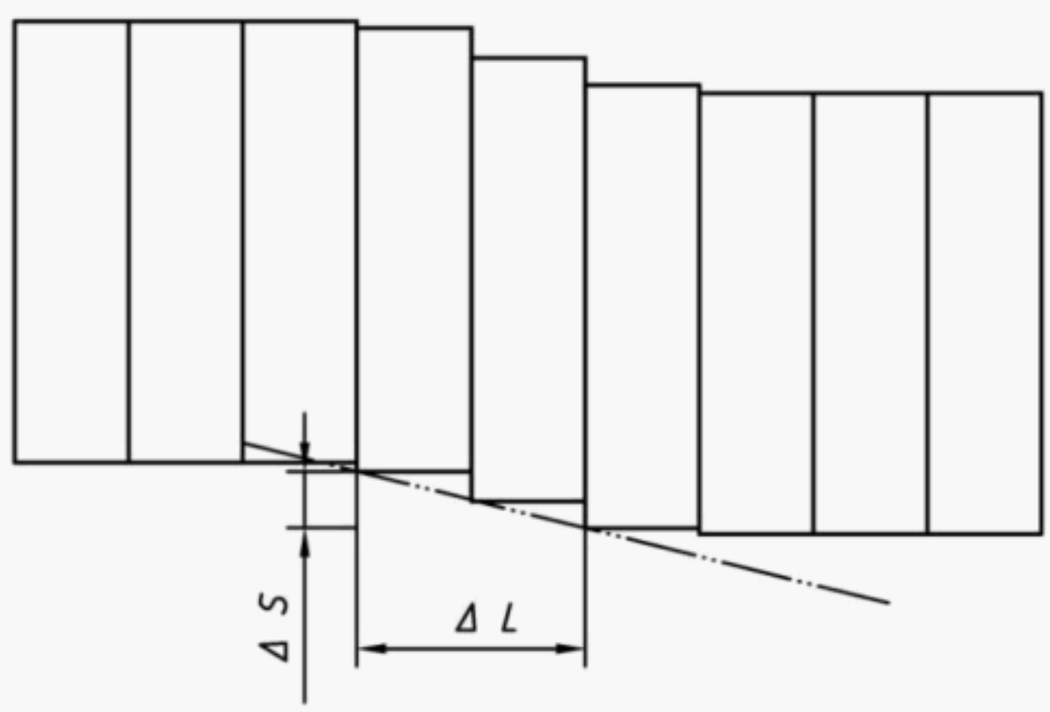

Figure C.14 - Front elevation of wall

compressibility : ratio ΔH / H

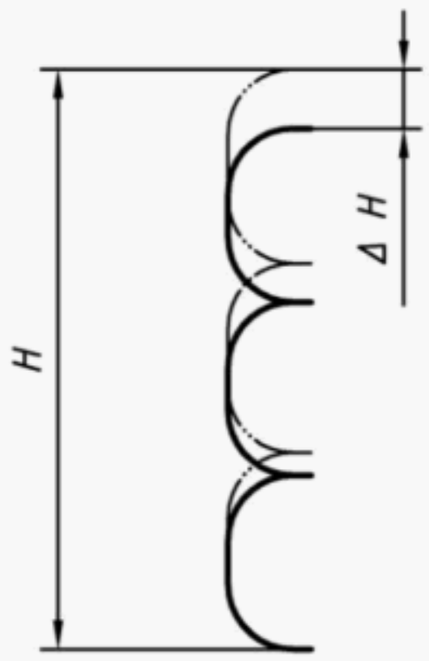

Figure C.15 - Cross section through wall

Table C.1 - PARTIAL HEIGHT FACING PANELS

		REINFORCEMENT	MAIN APPLICATIONS
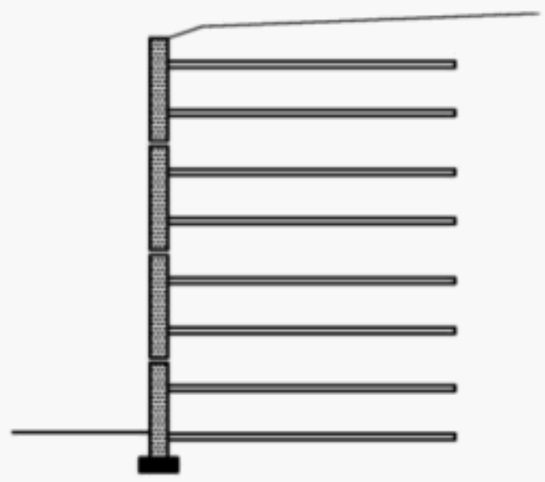		Most commonly used with steel or polymeric strips, or steel welded wire mesh. Also with steel ladder strips, rods, or geogrids.	Most commonly used for vertical walls, straight or curved, possibly tiered, and bridge abutments. Slightly battered walls can be built, provided the wall is more or less straight.
TECHNOLOGY	LONGITUDINAL FLEXIBILITY	TRANSVERSAL FLEXIBILITY	FILL MATERIAL
Usually built in vertical rows and a staggered arrangement, which makes propping unnecessary. Compressible bearing devices are applied to all horizontal joints.	Panel aspect ratio, combined with compressible bearing devices gives good system articulation. Hence, significant tolerance to longitudinal differential settlement, especially when panel aspect ratio is near unity.	The compressible bearing devices make the systems semi-flexible	Most commonly used with granular fill material. Intermediate fills can also be used for some applications (see Annex A for guidance).
TOLERANCES			OTHER COMMENTS
Alignment ± 25 mm	Differential settlement ~ 1% with panel aspect ratio ≈ 1 to ~ 0,5% with larger ratios.	Compressibility ~ 1%	

标准分享网 www.bzfxw.com 免费下载

Table C.2 - FULL HEIGHT FACING PANELS

		REINFORCEMENT	MAIN APPLICATIONS
		Mostly used with geogrids, steel strips, or welded wire mesh. Polymeric strips, steel ladder strips or rods can also be used.	Most commonly used for vertical walls a few metres high, straight or curved, and minor bridge abutments. Slightly battered walls can be built, provided the wall is straight.
TECHNOLOGY	LONGITUDINAL FLEXIBILITY	TRANSVERSAL FLEXIBILITY	FILL MATERIAL
Propping is needed during construction.	High vertical panel aspect ratio gives low tolerance to longitudinal differential settlement.	Rigid facing system (unless allowance is made for potential differential movement between the reinforced fill mass and the facing, by means of moving or sliding connections).	Well compacted granular fill material (unless moving connections are used and the system becomes semi flexible).
TOLERANCES			OTHER COMMENTS
Alignment ± 25 mm	Differential settlement ≤ 0,5%	Compressibility ~ 0 % (unless moving connections are used)	Panels with horizontal "fracture lines" having a controlled degree of fragility, are meant to provide some transversal flexibility which eases the mobilisation of the soil/reinforcement interaction.

Table C.3 - SLOPING PANELS

		REINFORCEMENT	MAIN APPLICATIONS
		Commonly used with steel strips	Sloping straight walls for bulk slot storage facilities. Inclination usually between 50° and 65°.
TECHNOLOGY	LONGITUDINAL FLEXIBILITY	TRANSVERSAL FLEXIBILITY	FILL MATERIAL
Habitually built in horizontal courses in a brickwork arrangement. Buttresses sitting on compacted fill. Compressible bearing pads applied to horizontal joints.	Tolerance to longitudinal differential settlement is limited as a result of the brickwork pattern and since it also affects the evenness of the face.	The compressible bearing pads combined with the direct support by the compacted fill make the systems semi-flexible	Good quality granular fill is recommended especially for high walls supporting superstructure (roof).
TOLERANCES			OTHER COMMENTS
Alignment ± 25 mm	Differential settlement ~ 0,5%	Compressibility ~ 1 %	Placement and compaction of fill between buttresses and under sloping slabs requires special care.

Table C.4 - PLANTER UNITS

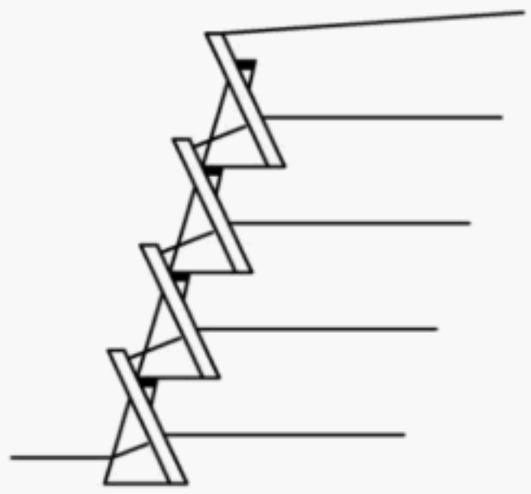		REINFORCEMENT Commonly used with steel strips	MAIN APPLICATIONS Vertical, battered or inclined vegetated walls.
TECHNOLOGY	LONGITUDINAL FLEXIBILITY	TRANSVERSAL FLEXIBILITY	FILL MATERIAL
Units installed in horizontal courses and vertical rows. Buttresses sitting partially (vertical or battered walls) or totally (inclined walls) on the compacted fill. Compressible bearing pads applied when units sit on top of each other. (vertical or battered).	Independent units arranged in vertical rows, possibly combined with compressible bearing pads, gives good system articulation. Hence, good tolerance to longitudinal differential settlement.	The compressible bearing pads (where applicable) combined with the direct support by the compacted fill make the systems semi-flexible	Most commonly used with granular fill material. Intermediate fills can also be used for some applications (see Annex A for guidance).
TOLERANCES			OTHER COMMENTS
~~Alignment~~ ± 50 mm	~~Differential settlement~~ ~ 1 %	~~Compressibility~~ ~ 1 % if bearing pads are used More when units are fully supported by compacted fill (inclined walls).	The layout of battered walls should be straight or polygonal. For curved layouts an adjustment is necessary (modification of the length of facing units within the level)

标准分享网 www.bzfxw.com 免费下载

Table C.5 - SEGMENTAL CONCRETE BLOCKS

		REINFORCEMENT	MAIN APPLICATIONS
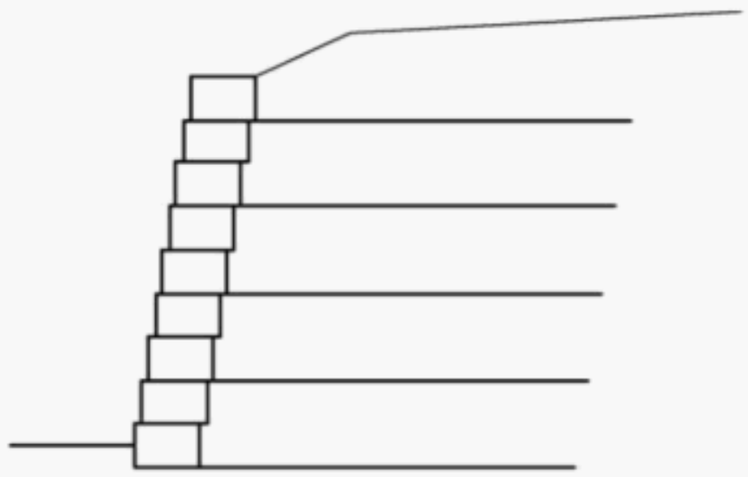		Mostly used with geogrids, steel ladder strips or steel grid reinforcement. Other types of reinforcement (steel or polymeric strips) can also be considered.	Most commonly used for vertical, tiered or battered walls and minor bridge abutments.
TECHNOLOGY	LONGITUDINAL FLEXIBILITY	TRANSVERSAL FLEXIBILITY	FILL MATERIAL
Segmental blocks are installed in horizontal courses and brickwork arrangement, usually without compressible packing material on horizontal joints. Fill reinforcement is usually either held between block courses, or attached to connecting devices at their interface.	The resistance of segmental block systems to longitudinal differential settlement is limited, since it can only result from the small size of the units and their movements relative to each other.	The lack of allowance for differential movement between the facing and the reinforcement makes the system rigid.	Good quality granular fill is recommended to mitigate the consequences of potential differential settlement between facing and reinforcement.
TOLERANCES			OTHER COMMENTS
Alignment ± 50 mm	Differential settlement ~ 0,5 %	Compressibility ~ 0 %	

Table C.6 - KING POST SYSTEM

		REINFORCEMENT	MAIN APPLICATIONS
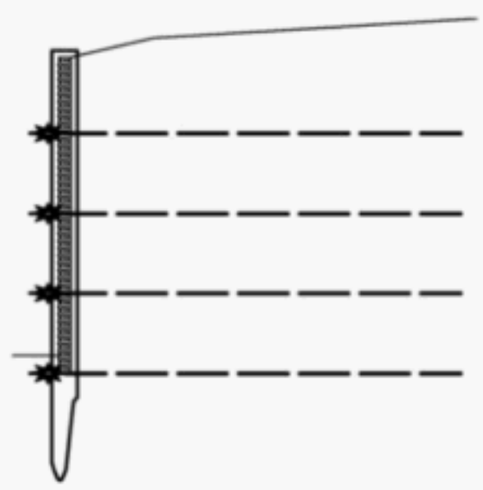		Mostly used with polymeric geogrids. The reinforcement is usually connected to a bar that slides on the rear flanges of the king posts or clamped between the concrete planks with a lock on the outside face.	Used for vertical walls only
TECHNOLOGY	LONGITUDINAL FLEXIBILITY	TRANSVERSAL FLEXIBILITY	FILL MATERIAL
Horizontal precast concrete planking slid between vertical steel universal column posts. Compressible bearing pads generally applied to horizontal joints.	Large panel aspect ratio results in low ability to articulate longitudinally and limited tolerance to longitudinal differential settlement.	The system is semi flexible when compressible bearing pads are applied between the concrete planks.	Granular fill or Intermediate fill material.
TOLERANCES			OTHER COMMENTS
Alignment ± 25 mm	Differential settlement ~0,5 %	Compressibility ~ 1 %	The reinforcement may also be attached directly to the steel posts. In this case the system becomes rigid unless sliding connections are used.

Table C.7 - SEMI ELLIPTICAL STEEL FACE

		REINFORCEMENT	MAIN APPLICATIONS
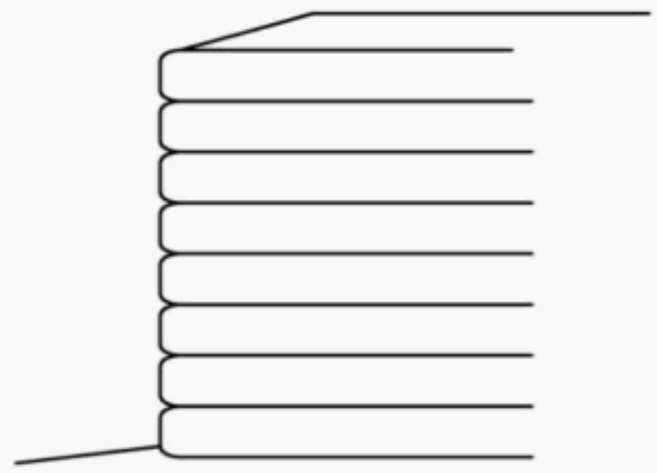		Steel strips, or ladders, bolted to steel facing units.	Vertical walls (for example for industrial applications) and bridge abutments. Applies to straight or polygonal layouts.
TECHNOLOGY	LONGITUDINAL FLEXIBILITY	TRANSVERSAL FLEXIBILITY	FILL MATERIAL
Facing elements of steel sheet formed into semi-elliptical or U-shaped half cylinders.	The large deformability of the units gives the system a high resistance to longitudinal differential settlements.	High vertical compressibility of the steel units make the system semi flexible to fully flexible.	Most commonly used with granular fill material. Intermediate fills can also be used for some applications (see Annex A for guidance).
TOLERANCES			OTHER COMMENTS
Alignment ± 50 mm	Differential settlement ~ 2 %	Compressibility ~ 10 %	

Table C.8 - STEEL WIRE GRID

		REINFORCEMENT	MAIN APPLICATIONS
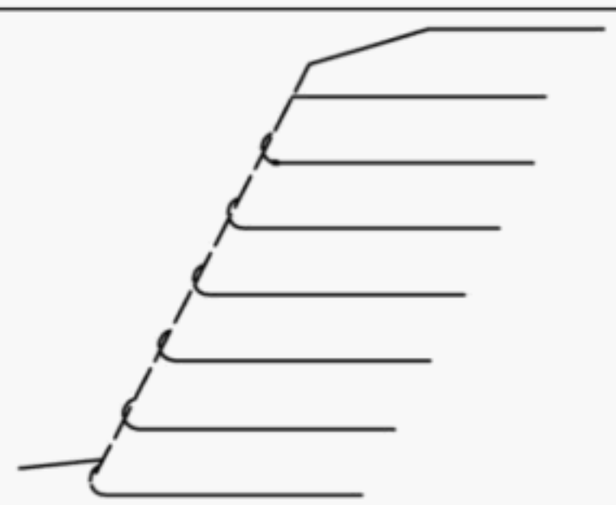		Mostly used with polymeric geogrids, steel strip, ladder or grid fill reinforcement.	Vertical, battered or inclined, possibly tiered, earth retaining structures. Inclined faces are usually seeded to give vegetation cover. Vertical or battered faces are usually backed with geotextile (particularly for temporary applications) or with a layer of stone or crushed rock.
TECHNOLOGY	LONGITUDINAL FLEXIBILITY	TRANSVERSAL FLEXIBILITY	FILL MATERIAL
Open backed steel grid or steel mesh sections, either flat or pre-bent to required slope angle.	Generally high resistance to longitudinal differential settlement.	Semi-flexible system : low bending stiffness and vertical compressibility allow the facing to deform vertically and to accompany moderate settlement of the retained fill.	Most commonly used with granular fill material. Intermediate fills can also be used for some applications (see Annex A for guidance).
TOLERANCES			OTHER COMMENTS
~~Alignment~~ ± 100 mm	~~Differential settlement~~ ~ 2 %	~~Compressibility~~ ~ 5 %	A filter may be required between fill and crushed rock, if used at the face.

标准分享网 www.bzfxw.com 免费下载

Table C.9 - GABION BASKETS

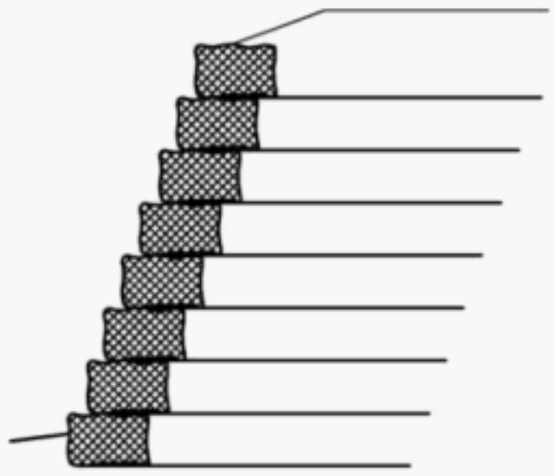		REINFORCEMENT Mostly used with layers of metallic meshes, polymeric geogrids and geotextiles (woven, or special nonwoven or compound fabrics). The reinforcement is connected to or continuous with the base of the gabion basket.	MAIN APPLICATIONS Mostly used for vertical or battered, possibly tiered walls.
TECHNOLOGY Gabion baskets may be formed from steel welded or woven wire mesh, or polymeric geogrids. The gabion baskets are filled with stone or crushed rock.	LONGITUDINAL FLEXIBILITY Generally high resistance to longitudinal differential settlement.	TRANSVERSAL FLEXIBILITY The compressibility of the gabion baskets is controlled by the nature and placement of the material used to fill the baskets. This generally makes the system semi flexible.	FILL MATERIAL Most commonly used with granular fill material. Intermediate fills can also be used for some applications (see Annex A for guidance).
TOLERANCES Alignment ± 100 mm	Differential settlement ~ 2 %	Compressibility ~ 5 %	OTHER COMMENTS A filter is usually required between the fill and the gabion baskets.

Table C.10 - WRAPPED AROUND (without formwork)

		REINFORCEMENT	MAIN APPLICATIONS
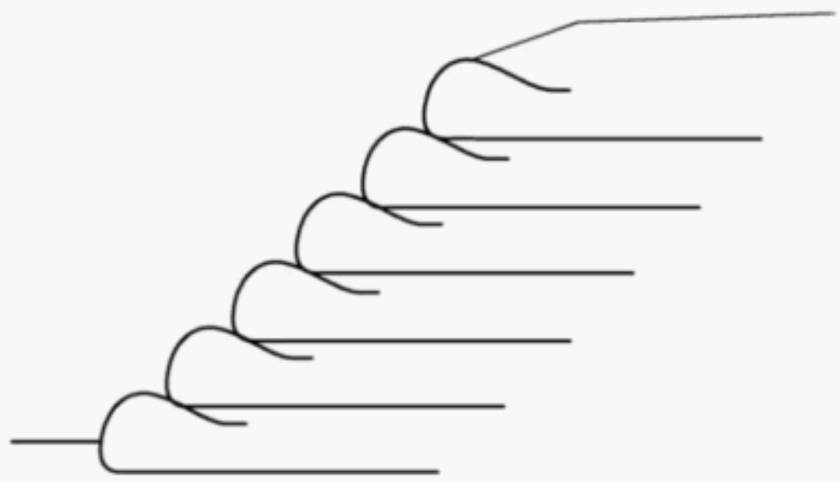		Geogrids, geotextiles, woven wire mesh.	Shallow slopes, around 1/1. In most cases such slopes are sprayed or seeded to produce a vegetative cover.
TECHNOLOGY	LONGITUDINAL FLEXIBILITY	TRANSVERSAL FLEXIBILITY	FILL MATERIAL
Facing made of polymeric grids or geotextiles, or woven wire mesh. Built in horizontal courses. Where polymeric grids or woven wire mesh are used, these may geotextile to guard against be backed with a suitable erosion.	High tolerance to longitudinal differential settlement.	Flexible system	May include fine materials when draining geotextiles are used.
TOLERANCES ~~Alignment~~ ± 200 mm ~~Construction~~ tolerances decrease with increasing height and decreasing fill quality.	~~Differential settlement~~ ~ 5 %.	~~Compressibility~~ ≥ 10 %.	OTHER COMMENTS Risk from vandalism and fire, reduced by vegetative or shotcrete cover.

标准分享网 www.bzfxw.com 免费下载

Table C.11 - WRAPPED AROUND (with formwork) or BAGGED

		REINFORCEMENT	MAIN APPLICATIONS
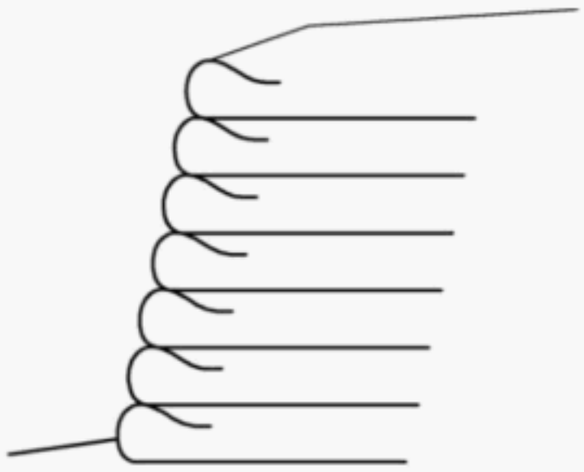		Geogrids, geotextiles, woven wire mesh.	Inclined or battered walls. Such slopes are often sprayed or seeded to produce a vegetative cover, or faced with shotcrete. Also used for vertical walls, with an independent concrete cladding in front.
TECHNOLOGY	LONGITUDINAL FLEXIBILITY	TRANSVERSAL FLEXIBILITY	FILL MATERIAL
Facing made of polymeric grids or geotextiles, or woven wire mesh. Built in horizontal courses. To construct such slopes to an acceptable alignment it is common practice to use temporary formwork.	High tolerance to longitudinal differential settlement (except once possibly covered with shotcrete).	Flexible system.	May include fine materials when draining geotextiles are used.
TOLERANCES			OTHER COMMENTS
Alignment ± 100 mm Fair construction tolerances obtained with care and better quality fill.	Differential settlement ~ 5 %	Compressibility ≥ 10 %	Risk from vandalism and fire reduced by vegetative or shotcrete cover.

Table C.12 - IN-SITU CONCRETE FACING

		REINFORCEMENT	MAIN APPLICATIONS
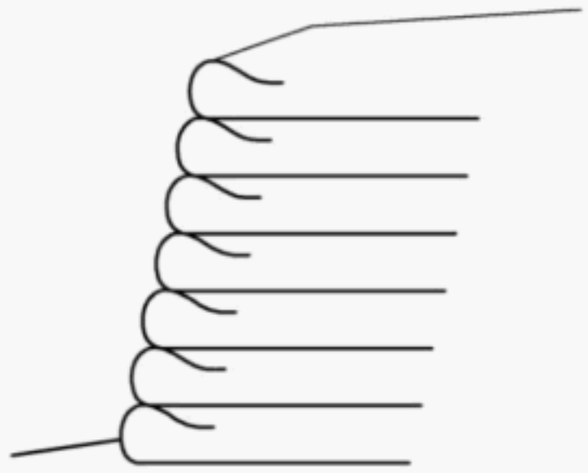		See comments for steel wire grid facing and wrapped around facing.	Inclined or battered walls.
TECHNOLOGY	LONGITUDINAL FLEXIBILITY	TRANSVERSAL FLEXIBILITY	FILL MATERIAL
Used occasionally as adjunct to steel wire grid facing or wrapped around facing.	Near zero tolerance to longitudinal differential settlement once the concrete face is cast.	Near zero tolerance to differential settlement between facing and reinforcement once the concrete face is cast.	See comments for steel wire grid facing and wrapped around facing.
TOLERANCES			OTHER COMMENTS
Alignment ± 50 mm	Differential settlement ~ 0 %	Compressibility ~ 0 %	

Annex D
(informative)

Some typical reinforcement forms

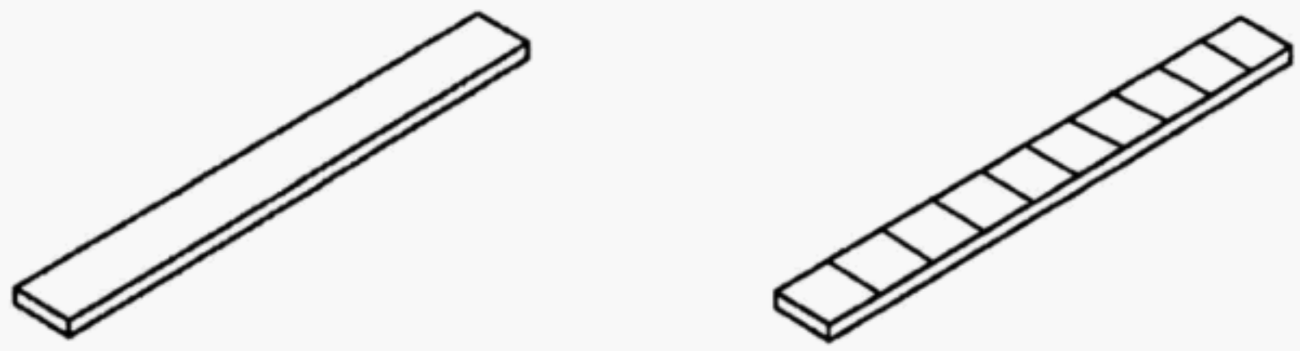

a) Strip Plain Ribbed

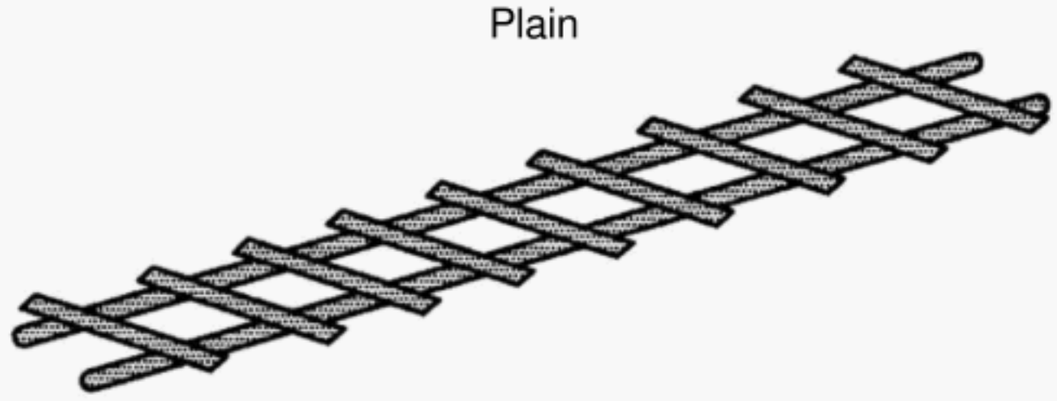

b) Ladders

c) Rods

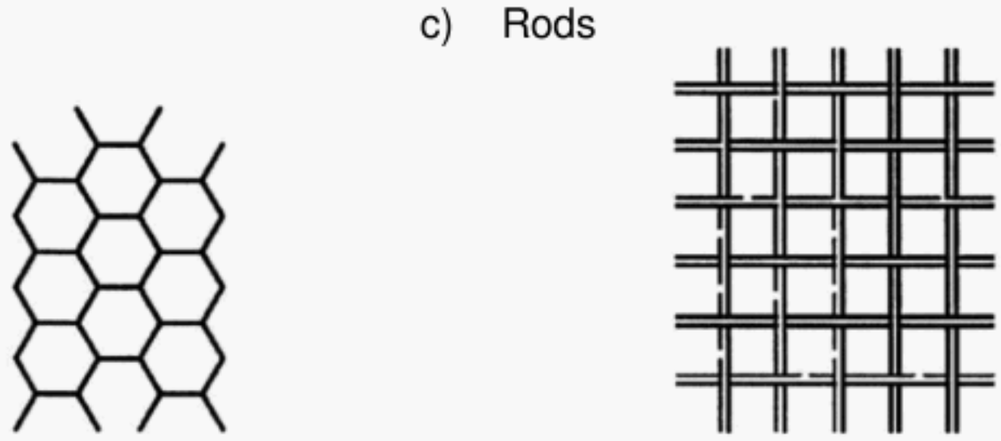

d) Meshes

标准分享网 www.bzfxw.com 免费下载

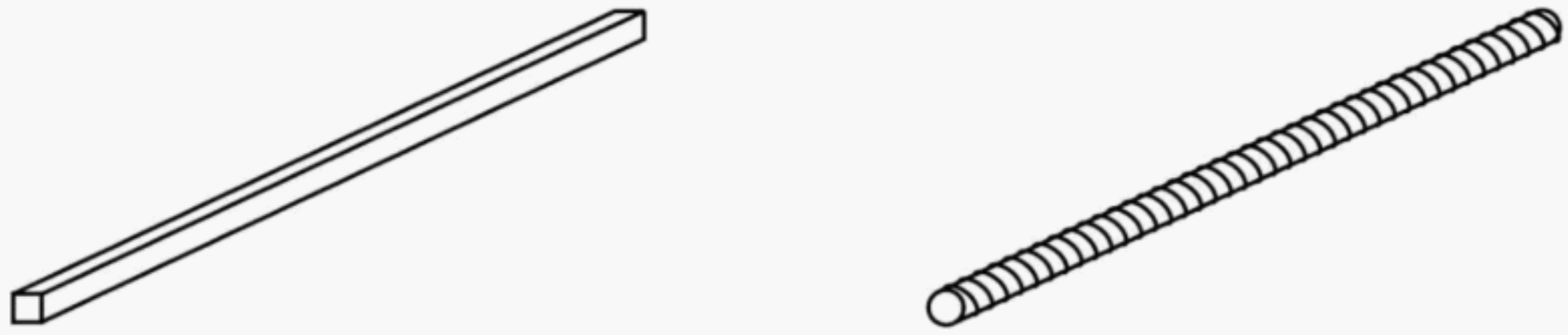

e) Bars

Figure D.1 - Steel reinforcements

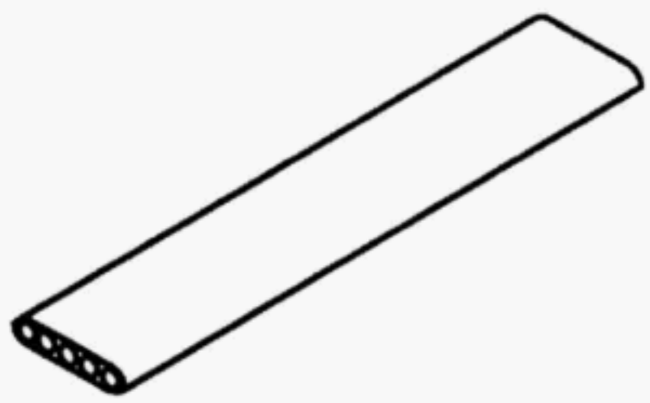

a) Strips

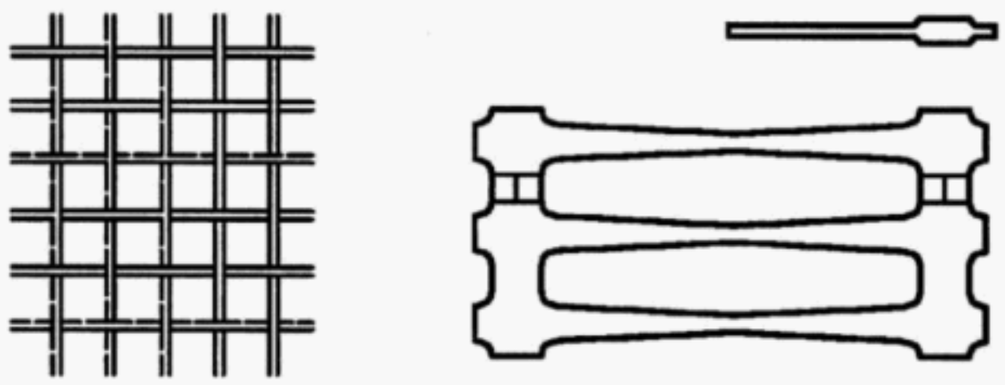

b) Grids

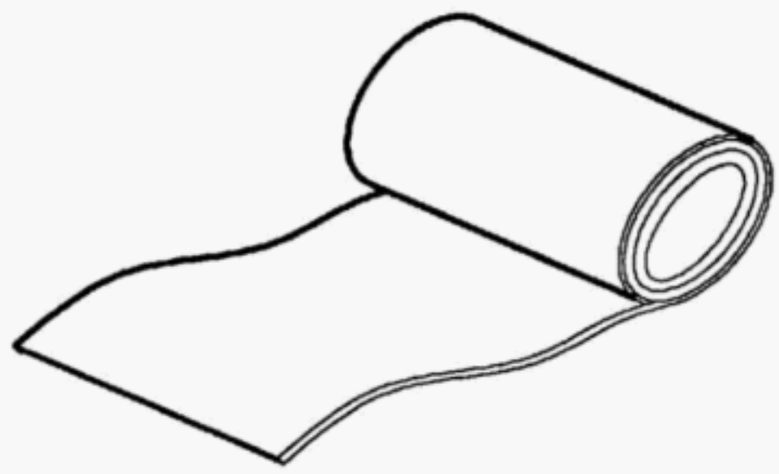

c) Sheets

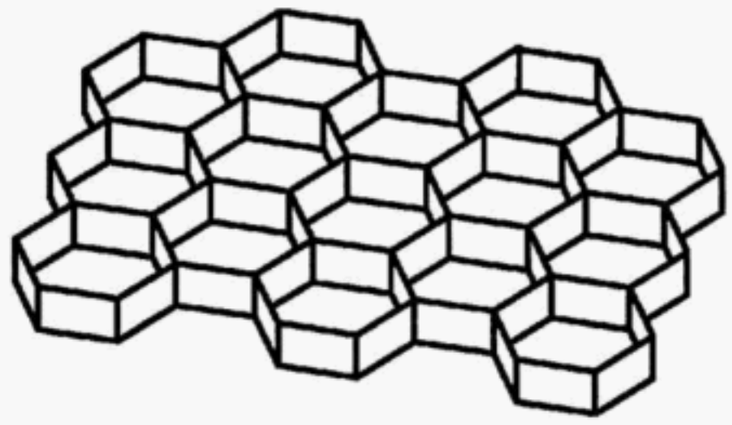

d) Cells

Figure D.2 — Polymeric reinforcements

标准分享网 www.bzfxw.com 免费下载

Annex E
(informative)

Steel reinforcement

E.1 General

E.1.1 Examples of widely used types of steel reinforcement are described in the following clauses. The recommended specifications are based on extensive experience and trials or are justified by third party Certification, and are given for guidance for the relevant applications identified in Annex B.

E.1.2 The recommended grades of steel are particularly important with regard to durability, since they ensure a relatively uniform and superficial mode of corrosion, at a predictable rate, in moderately aggressive environments, as defined in Annex B.

E.2 Steel strips

E.2.1 Steel strip fill reinforcement should be made of steel conforming with EN 10025-2 (Hot-rolled products of structural steels – Part 2: Technical delivery conditions for non-alloy structural steels), or EN 10025-4 (Hot rolled products of structural steels – Part 4: Technical delivery conditions for thermomechanical rolled weldable fine grain structural steels. The steel should be grade S235, S275, S355, S420 or S460 and suitable for galvanising, where used.

E.3 Welded wire mesh, ladders or rods

E.3.1 Welded steel wire mesh, grids or ladders used as fill reinforcement should be made of cold drawn steel wire or hot rolled steel conforming with EN 10080 and then formed into the finished reinforcing product.

Rods and bars used as fill reinforcement should be made of cold drawn steel wire or hot rolled steel.

E.4 Ties, nuts and bolts

E.4.1 Standards given for the materials used for soil reinforcements will also apply to ties.

E.4.2 If nuts and bolts are used to join ties and steel reinforcements they should conform with EN ISO 898-1.

E.5 Galvanisation

E.5.1 Steel strips, rods, bars, ladders or welded wire meshes may be provided with a galvanizing coating. The galvanizing shall conform to EN ISO 1461 with a local coating thickness of 70 µm. Thin strips may be galvanised in accordance with EN 10326 with a local coating thickness of 35 µm.

E.5.2 Steel strip ties hot dip galvanised per EN ISO 1461 should be bent into shape before they are coated.

E.5.3 Hot dip galvanisation of bolts and nuts should conform to the appropriate standard.

E.6 Zinc-aluminium spray coating

E.6.1 Zinc-aluminium thermal spray coatings applied to steel reinforcing strips for use in specific aggressive environments should conform with the requirements of EN ISO 2063 and be type (Zn85Al15)70 with a local coating thickness of 70 µ.

E.7 Woven wire mesh

E.7.1 Woven steel wire meshes used as fill reinforcement should be made of cold drawn steel conforming to EN 10218 and should be woven into the finished reinforcing product in accordance with EN 10223-3.

E.7.2 Hot dip galvanized coatings on wires for woven meshes should conform with EN 10244 and the extruded organic coating should conform to EN 10245.

标准分享网 www.bzfxw.com 免费下载

Annex F
(informative)

Recommendations for facing units

F.1 Concrete panels

F.1.1 Prefabricated concrete panels should be made of vibrated concrete conforming with the requirements of EN 206-1. The design of the panels may be based on EN 1992 or, alternatively, on EN 1990, section 5, if it is principally validated by experimentation and testing. Because of their relatively small size, many panels are usually not reinforced. If reinforced, the units should be reinforced with steel reinforcing bars conforming to EN 10080.

F.1.2 To facilitate acceptable construction tolerances, prefabricated concrete units should be manufactured to the following tolerances : panel thickness within –5 mm +10 mm, panel dimensions and squareness, as determined by the difference between two diagonals, within 0,5 %, surface defects measured with a 1m long template within 5 mm on formed surfaces.

F.1.3 Prefabricated concrete units should not be transported to site or installed until the concrete has reached a compressive strength of at least 60 % of its characteristic compressive strength.

F.2 Concrete blocks

F.2.1 Unless specified otherwise, the concrete for machine-made hollow and solid concrete segmental blocks intended for use in the construction of reinforced fill walls, should conform to EN771-3

F.3 Welded steel wire mesh

F.3.1 Welded steel wire mesh or ladders used for facing units should be made of cold drawn steel wire or hot rolled steel conforming to EN 10080 and then formed into the finished reinforcing product and conform to EN 10223-4.

F.3.2 Where welded steel mesh facing units are galvanised, hot dip galvanising should conform to EN ISO 1461.

F.4 Woven steel wire mesh

F.4.1 Woven steel wire meshes used for facing units and gabions should be made of cold drawn steel wires conforming to EN 10218 and the finished product should be woven in accordance to EN 10223-3. Any Zinc/Aluminium coating should conform to EN ISO 10244 and any polymeric coating should comply with EN 10245.

F.5 Semi-elliptical steel units

F.5.1 Semi-elliptical steel facing units should be pressed from flat steel sheets, conforming with EN 10025-2, and be constructed of grade S235J, S275 and S355 steel.

F.5.2 Where semi-elliptical steel facing units are galvanised, hot dip galvanising should conform with EN ISO 1461 with a local coating thickness of 70 µ.

标准分享网 www.bzfxw.com 免费下载

Bibliography

[1] BS1377, *Methods of test for soils for civil engineering purposes*

[2] BS8006, *Code of practice for strengthened/reinforced soils and other fills*

[3] NF P 94-220, *Reinforcement des sols – Ouvrages en sols rapportes renforces par armatures ou napes peu extensibles et souples – Partie 0 : Justification du dimensionnement*

[4] NF A 05-252, *Corrosion par les sols – Aciers galvanisés ou non mis au contact de matériaux naturels de remblai (sols)*

[5] NF T 01-013, *PH-métrie – Mesure électrométrioque du pH au moyen d'une életrode de verre – Vocabulaire et méthode de mesure*

[6] NF T 90-009, *Essais des eaux – Dosage des ions sulfate – Méthode gravimétrique*

[7] *Encyclopedia of Industrial Chemical Analysis, Snell and Hilton. (Wiley Interscience Publishing, 1974)*

[8] EN 771-3, *Specification for masonry units – Part 3 : Aggregate concrete masonry units (Dense and lightweight aggregates).*

[9] ISO 9297, *Water quality – Determination of chloride - Silver nitrate titration with chromate indicator (Mohr's method).*

[10] EN ISO 10318, *Geosynthetics – Terms and definitions (ISO 10318: 2005)*

[11] EN 12447, *Geotextiles and geotextile-related products – Screening test method for determining the resistance to hydrolysis in water.*

blank

标准分享网 www.bzfxw.com 免费下载

BS EN 14475:2006

BSI — British Standards Institution

BSI is the independent national body responsible for preparing British Standards. It presents the UK view on standards in Europe and at the international level. It is incorporated by Royal Charter.

Revisions

British Standards are updated by amendment or revision. Users of British Standards should make sure that they possess the latest amendments or editions.

It is the constant aim of BSI to improve the quality of our products and services. We would be grateful if anyone finding an inaccuracy or ambiguity while using this British Standard would inform the Secretary of the technical committee responsible, the identity of which can be found on the inside front cover. Tel: +44 (0)20 8996 9000. Fax: +44 (0)20 8996 7400.

BSI offers members an individual updating service called PLUS which ensures that subscribers automatically receive the latest editions of standards.

Buying standards

Orders for all BSI, international and foreign standards publications should be addressed to Customer Services. Tel: +44 (0)20 8996 9001. Fax: +44 (0)20 8996 7001. Email: orders@bsi-global.com. Standards are also available from the BSI website at http://www.bsi-global.com.

In response to orders for international standards, it is BSI policy to supply the BSI implementation of those that have been published as British Standards, unless otherwise requested.

Information on standards

BSI provides a wide range of information on national, European and international standards through its Library and its Technical Help to Exporters Service. Various BSI electronic information services are also available which give details on all its products and services. Contact the Information Centre. Tel: +44 (0)20 8996 7111. Fax: +44 (0)20 8996 7048. Email: info@bsi-global.com.

Subscribing members of BSI are kept up to date with standards developments and receive substantial discounts on the purchase price of standards. For details of these and other benefits contact Membership Administration. Tel: +44 (0)20 8996 7002. Fax: +44 (0)20 8996 7001. Email: membership@bsi-global.com.

Information regarding online access to British Standards via British Standards Online can be found at http://www.bsi-global.com/bsonline.

Further information about BSI is available on the BSI website at http://www.bsi-global.com.

Copyright

Copyright subsists in all BSI publications. BSI also holds the copyright, in the UK, of the publications of the international standardization bodies. Except as permitted under the Copyright, Designs and Patents Act 1988 no extract may be reproduced, stored in a retrieval system or transmitted in any form or by any means – electronic, photocopying, recording or otherwise – without prior written permission from BSI.

This does not preclude the free use, in the course of implementing the standard, of necessary details such as symbols, and size, type or grade designations. If these details are to be used for any other purpose than implementation then the prior written permission of BSI must be obtained.

Details and advice can be obtained from the Copyright & Licensing Manager. Tel: +44 (0)20 8996 7070. Fax: +44 (0)20 8996 7553. Email: copyright@bsi-global.com.

BSI

389 Chiswick High Road

London

W4 4AL