BRITISH STANDARD

BS EN 14018:2005

Agricultural and forestry machinery — Seed drills — Safety

The European Standard EN 14018:2005 has the status of a British Standard

ICS 65.060.30

British Standards

National foreword

This British Standard is the official English language version of EN 14018:2005.

The UK participation in its preparation was entrusted to Technical Committee AGE/32, Agricultural implements and trailers, which has the responsibility to:

— aid enquirers to understand the text;

— present to the responsible international/European committee any enquiries on the interpretation, or proposals for change, and keep UK interests informed;

— monitor related international and European developments and promulgate them in the UK.

A list of organizations represented on this committee can be obtained on request to its secretary.

Cross-references

The British Standards which implement international or European publications referred to in this document may be found in the BSI Catalogue under the section entitled “International Standards Correspondence Index”, or by using the “Search” facility of the BSI Electronic Catalogue or of British Standards Online.

This publication does not purport to include all the necessary provisions of a contract. Users are responsible for its correct application.

Compliance with a British Standard does not of itself confer immunity from legal obligations.

Summary of pages

This document comprises a front cover, an inside front cover, the EN title page, pages 2 to 27 and a back cover.

The BSI copyright notice displayed in this document indicates when the document was last issued.

This British Standard was published under the authority of the Standards Policy and Strategy Committee on 31 May 2006

© BSI 2006

ISBN 0 580 48301 0

Amendments issued since publication

Amd. No.	Date	Comments

EUROPEAN STANDARD

NORME EUROPÉENNE

EUROPÄISCHE NORM

EN 14018

October 2005

ICS 65.060.30

English Version

Agricultural and forestry machinery - Seed drills - Safety

Matériel agricole et forestier - Semoirs - Sécurité

Land- und Forstmaschinen - Sämaschinen - Sicherheit

This European Standard was approved by CEN on 26 August 2005.

CEN members are bound to comply with the CEN/CENELEC Internal Regulations which stipulate the conditions for giving this European Standard the status of a national standard without any alteration. Up-to-date lists and bibliographical references concerning such national standards may be obtained on application to the Central Secretariat or to any CEN member.

This European Standard exists in three official versions (English, French, German). A version in any other language made by translation under the responsibility of a CEN member into its own language and notified to the Central Secretariat has the same status as the official versions.

CEN members are the national standards bodies of Austria, Belgium, Cyprus, Czech Republic, Denmark, Estonia, Finland, France, Germany, Greece, Hungary, Iceland, Ireland, Italy, Latvia, Lithuania, Luxembourg, Malta, Netherlands, Norway, Poland, Portugal, Slovakia, Slovenia, Spain, Sweden, Switzerland and United Kingdom.

EUROPEAN COMMITTEE FOR STANDARDIZATION
COMITÉ EUROPÉEN DE NORMALISATION
EUROPÄISCHES KOMITEE FÜR NORMUNG

Management Centre: rue de Stassart, 36 B-1050 Brussels

© 2005 CEN All rights of exploitation in any form and by any means reserved worldwide for CEN national Members.

Ref. No. EN 14018:2005: E

Contents

page

Foreword 3

Introduction....4

1 Scope....5

2 Normative references 6

3 Terms and definitions....6

4 List of significant hazards....7

5 Safety requirements and/or protective measures 8
5.1 General 8
5.2 Controls....9
5.3 Swivelling and movable components....11
5.4 Hoppers 11
5.5 Loading....12
5.5.1 Safe access to loading location....12
5.5.2 Boarding means to loading location 14
5.6 Single seed drills....15
5.7 Blower....15
5.8 Flow rate calibration system....16
5.9 Hitching and clearance zone....16
5.10 Noise....18
5.10.1 Noise reduction as a safety requirement 18
5.10.2 Verification of requirements on noise based on noise emission values....18

6 Verification of the safety requirements and/or protective measures....18
Swivelling and movable components 18

7 Information for use 18
7.1 Instruction handbook 18
7.2 Marking....20

Annex A (informative) Examples of seed drills 21

Annex B (informative) Stability of the tractor-seed drill combination 24

Annex C (informative) Examples of pictograms....25

Annex ZA (informative) Relationship between this European Standard and the Essential Requirements of EU Directive 98/37/CE, amended by Directive 98/79/CE....26

Bibliography....27

Foreword

This European Standard (EN 14018:2005) has been prepared by Technical Committee CEN/TC 144 “Tractors and machinery for agriculture and forestry”, the secretariat of which is held by AFNOR.

This European Standard shall be given the status of a national standard, either by publication of an identical text or by endorsement, at the latest by April 2006, and conflicting national standards shall be withdrawn at the latest by April 2006.

This European Standard has been prepared under a mandate given to CEN by the European Commission and the European Free Trade Association, and supports essential requirements of EU Directive(s).

For relationship with EU Directive(s), see informative Annex ZA, which is an integral part of this European Standard.

According to the CEN/CENELEC Internal Regulations, the national standards organizations of the following countries are bound to implement this European Standard: Austria, Belgium, Cyprus, Czech Republic, Denmark, Estonia, Finland, France, Germany, Greece, Hungary, Iceland, Ireland, Italy, Latvia, Lithuania, Luxembourg, Malta, Netherlands, Norway, Poland, Portugal, Slovakia, Slovenia, Spain, Sweden, Switzerland and United Kingdom.

Introduction

This European Standard is a type C standard as stated in EN ISO 12100-1.

The machinery concerned and the extent to which hazards, hazardous situations and hazardous events are covered are indicated in the scope of this European Standard. These hazards are specific to seed drills.

Significant hazards that are common to all agricultural machines (self-propelled, mounted, semi-mounted and trailed) are dealt with in EN 1553:1999.

When provisions of this type C standard are different from those which are stated in type A or B standards, the provisions of this type C standard take precedence over the provisions of the other standards, for machines that have been designed and built according to the provisions of this type C standard.

1 Scope

This European Standard, applied together with EN 1553:1999, specifies the safety requirements and their verification for design and construction of mounted, semi-mounted, trailed or self-propelled seed drills, including the seeding function of combined seed and fertilizer drills, used in agriculture and in forestry. In addition, this European Standard specifies the type of information on safe working practices (including residual risks) to be provided by the manufacturer.

When requirements of this European Standard are different from those which are stated in EN 1553:1999 the requirements of this European Standard take precedence over the requirements of EN 1553:1999 for machines that have been designed and built according to the provisions of this European Standard.

It does not apply to:

fertilizer distributors designed only for solid fertilizer application (dealt with in EN 14017);

seed drills with integrated and inseparable powered soil working tools (see 3.2).

NOTE Powered soil working tools are dealt with in EN 708:1996 and EN 708:1996/A1:2000.

This European Standard deals with all the significant hazards, hazardous situations and events relevant to seed drills, when they are used as intended and under the conditions foreseen by the manufacturer (see Clause 4), excepting the hazards arising from:

electrostatic phenomena;

external influences on electrical equipment;

failure of energy supply;

failure, malfunction of control system;

inadequate visibility from drivers/operators position;

travelling functions (drive, braking etc.);

break-up of parts rotating at high speed;

equipment for loading seeds (and fertilizer).

It is not applicable to electromagnetic compatibility (EMC) nor to environmental hazards (except noise). These aspects are covered by EN 13740-1:2003 and EN 13740-2:2003 for combined seed and solid fertilizer drills.

This European Standard is not applicable to seed drills which are manufactured before the date of its publication as EN.

2 Normative references

The following referenced documents are indispensable for the application of this European Standard. For dated references, only the edition cited applies. For undated references, the latest edition of the referenced document (including any amendments) applies.

EN 294:1992, *Safety of machinery – Safety distances to prevent danger zones being reached by the upper limbs*

EN 1553:1999, *Agricultural machinery – Agricultural self-propelled, mounted, semi-mounted and trailed machines – Common safety requirements*

EN ISO 11688-1:1998, *Acoustics – Recommended practice for the design of low-noise machinery and equipment – Part 1: Planning (ISO/TR 11688-1:1995)*

EN ISO 12100-1:2003, *Safety of machinery – Basic concepts, general principles for design – Part 1: Basic terminology, methodology (ISO 12100-1:2003)*

EN ISO 12100-2:2003, *Safety of machinery – Basic concepts, general principles for design – Part 2: Technical principles (ISO 12100-2:2003)*

3 Terms and definitions

For the purposes of this European Standard, the terms and definitions given in EN ISO 12100-1:2003 and the following apply.

3.1

seed drill

machine for sowing seeds (e.g. cereals) in a continuous manner

3.2

seed drill with integrated and inseparable powered soil working tools

seed drill as a single machine including the functions of seeding and of soil working powered tools of which neither the seed drill nor the powered soil working tools can be used separately

3.3

single seed drill

machine for sowing one seed at a time (e.g. sugar beet) with equal space between each seed

NOTE Examples of such machines are given in Annex A.

3.4

combined seed and fertilizer drill

machine which simultaneously applies seed and fertilizer

NOTE Adapted from EN 13740-1:2003.

3.5

application rate

mass applied in the band of seeds applied per unit area, in kg/ha

NOTE Adapted from EN 13740-1:2003.

4 List of significant hazards

For the purposes of this European Standard, Table 1 gives, for defined danger zones, all the significant hazards, the significant hazardous situations and the significant hazardous events, covered by this European Standard, that have been identified by risk assessment as being significant for this type of machine, and which require specific action to eliminate or to reduce the risk.

Table 1 — List of significant hazards associated with seed drills

Nr	Hazard	Location or event	Clause/subclause of EN 1553:1999	Clause/subclause of this European Standard
1.1	Crushing hazard	Folding and unfolding of swivelling and movable components, closing of the cover of the hopper, calibration, insufficient clearance zone when hitching	4.1.7.1, 4.2.2.2, 4.2.6.1, 4.3.2.3, 4.3.4.1	5.1, 5.3.2, 5.3.3, 5.3.4, 5.3.5, 5.4, 5.8, 5.9, 7.1
1.2	Shearing hazard	Folding and unfolding of swivelling and movable components, closing of the cover of the hopper	4.1.7.3, 4.2.2.2	5.1, 5.3.2, 5.3.3, 5.3.4, 5.3.5, 5.4, 7.1
1.3	Cutting or severing hazard	Folding and unfolding of swivelling and movable components, closing of the cover of the hopper	4.1.1, 4.1.7.1, 4.2.6.1, 4.3.2.3, 4.3.4.1	5.1, 5.3.2, 5.3.3, 5.3.4, 5.3.5, 5.4
1.4	Entanglement hazard	Closing of the cover of the hopper, contact with a drive part or the blower	4.1.1, 4.1.7.1, 4.2.6.1, 4.3.2.3, 4.3.4.1	5.1, 5.4, 5.5, 5.6, 5.7
1.5	Drawing-in or trapping hazard	Contact with a drive part or the blower		5.1, 5.4, 5.6, 5.7, 5.9, 7.1
1.6	Impact hazard	Closing of the cover of the hopper, insufficient clearance zone when hitching	4.1.1, 4.1.7.1, 4.1.7.3, 4.2.6.1, 4.3.2.3, 4.3.4.1	5.1, 5.4, 5.9
1.9	High pressure fluid injection or ejection hazard	Rupture of pressurised hoses	4.1.8.2	5.1
2.2	Contact of persons with parts which have become live under faulty conditions (direct and indirect contact)	Contact of the swivelling and movable components with overhead power line	-	5.3.1, 7.1
4.1	Hearing loss (deafness), other physiological disorders (e.g. loss of balance, loss of awareness)	Hearing damage due to the working of the machine	4.1.2, Annex D	5.10, 7.1
5.2	Whole body vibration, particularly when combined with non-ergonomic postures	Platform transmitting the vibration of the blower and of the uneven ground	4.1.3	-
7.1	Hazards from contact with or inhalation of harmful fluids, gases, mists, fumes, and dusts	Leakage of fuel, contact with operating fluid, contact with seeds	4.2.5.2, 4.2.6.2, 4.3.4.2, 5.1	7.1

Table 1 — List of significant hazards associated with seed drills (*concluded*)

Nr	Hazard	Location or event	Clause/subclause of EN 1553:1999	Clause/subclause of this European Standard
8.1	Unhealthy postures or excessive efforts	Controls so located that the operator has to enter a dangerous zone to actuate them, non-ergonomic access to loading, hopper contents inadequately located, insufficient clearance zone when hitching	4.1.4, 4.1.5.1, 4.1.6, 4.2.6.1, 4.3.4.1	5.2, 5.3, 5.5, 5.9
8.2	Inadequate consideration of hand-arm or foot-leg anatomy	Controls so located that the operator has to enter a dangerous zone to actuate them and inappropriate dimensioning of accesses for loading, insufficient clearance zone when hitching	4.1.5.1, 4.1.5.2, 4.1.6, 4.2.2.2, 4.2.2.3.1, 4.2.3	5.2, 5.5, 5.9
8.7	Inadequate design, location or identification of manual controls	Controls so located that the operator has to enter a dangerous zone	4.2.1, 4.3.1	5.2
15	Errors of fitting	Fitting of seeding units without covered power transmission parts on the outside	-	5.6, 7.1
17	Ejected objects	Discharge of foreign matter through the blower	4.1.8.2	5.7
18	Loss of stability/overturning of machinery	Lack of stability when parked	4.2.4.1, 4.3.2.1	-
19	Slip, trip and fall of persons from machinery or during access to (or at/from) the work position	Falling off the access of loading because of slipping surface	4.1.5.1, 4.1.5.2, 4.1.5.3, 4.1.6, 4.2.5.2, 4.2.6.2, 4.3.4.2	5.5, 7.1, 7.2
20.1	Movement when starting the engine	Movement of the swivelling and movable components when the machine starts	4.2.2.5	-
20.3	Movement without all parts in a safe position	Movement of the swivelling and movable components when the machine starts	-	5.3.3, 5.3.4, 5.3.5, 7.1
22.1	Inadequate location and mode of operation of manual controls	Controls so located that the operator has to enter a dangerous zone to actuate them, contact with swivelling and movable components	4.2.1, 4.3.1	5.2, 5.3.2, 5.3.3, 5.3.4, 5.3.5
24.2	Hazards from transmission of power	Contact with the drive	4.1.7.1, 4.3.2.3	-
24.3	Hazards from hitching	Insufficient clearance zone when hitching	4.2.4.1.1, 4.3.2.2	5.9, 7.1

5 Safety requirements and/or protective measures

5.1 General

Machinery shall comply with the safety requirements and/or protective measures of this clause. In addition, the machine shall be designed according to the principles of EN ISO 12100 for relevant but not significant hazards, which are not dealt with by this European Standard.

5.2 Controls

5.2.1 Manual controls for the adjustments located on the machines which are intended to be mounted at the rear of soil working machines with powered tools shall meet the following requirements:

a) the adjustments shall be possible with the machine stopped;

b) the manual controls shall be located so that the operator does not need to be at the front of the machine to activate them. This requirement is met if manual controls are accessible to the operator standing on the ground and not located in the shaded area as shown in Figure 1. This shall be verified by measurement and inspection. Markers are excluded from the outer limits of the seed drill. See also 7.1 a).

Dimensions in millimetres

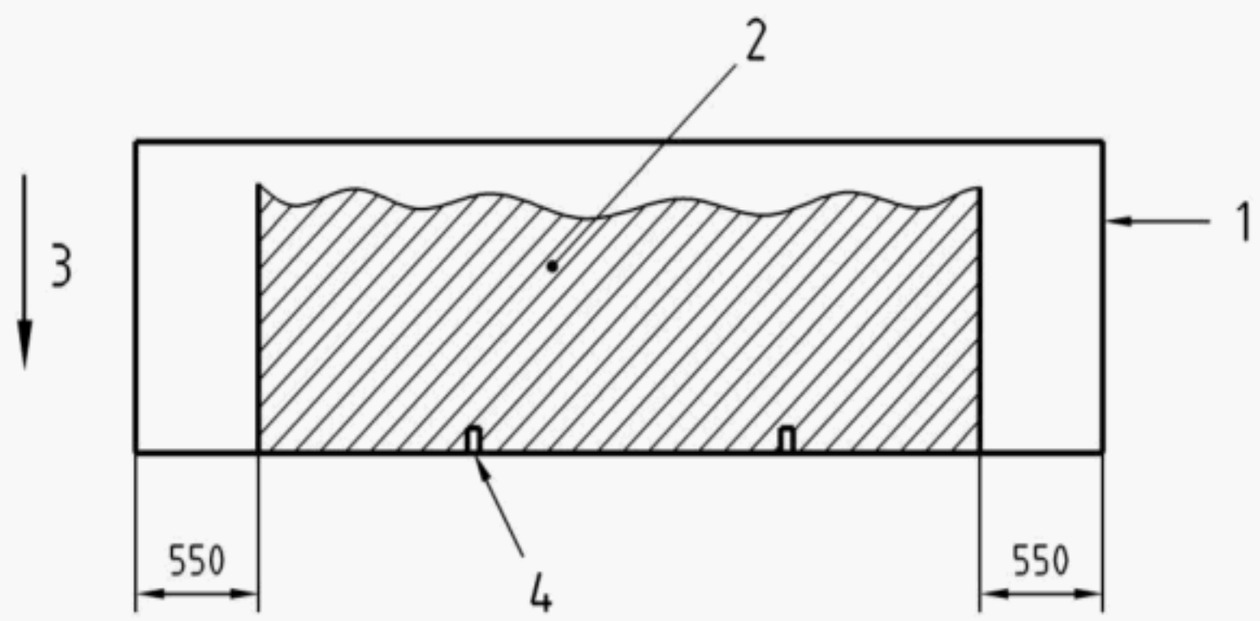

Key

1 Outer limits of the seed drill
2 Area in which the manual controls for the adjustments shall not be located
3 Forward direction
4 Lower coupling points of the machine, if provided

Figure 1 — Area where the manual controls for the adjustments shall not be located (case of machines which are intended to be mounted on the rear of soil working machines with powered tools)

5.2.2 In other cases, manual controls for the adjustments located on the machine shall meet the following requirements:

a) the adjustments shall be possible with the machine stopped;

b) the manual controls accessible to the operator standing on the ground shall not be located in the shaded area as shown in Figure 2. See also 7.1 a).

Dimensions in millimetres

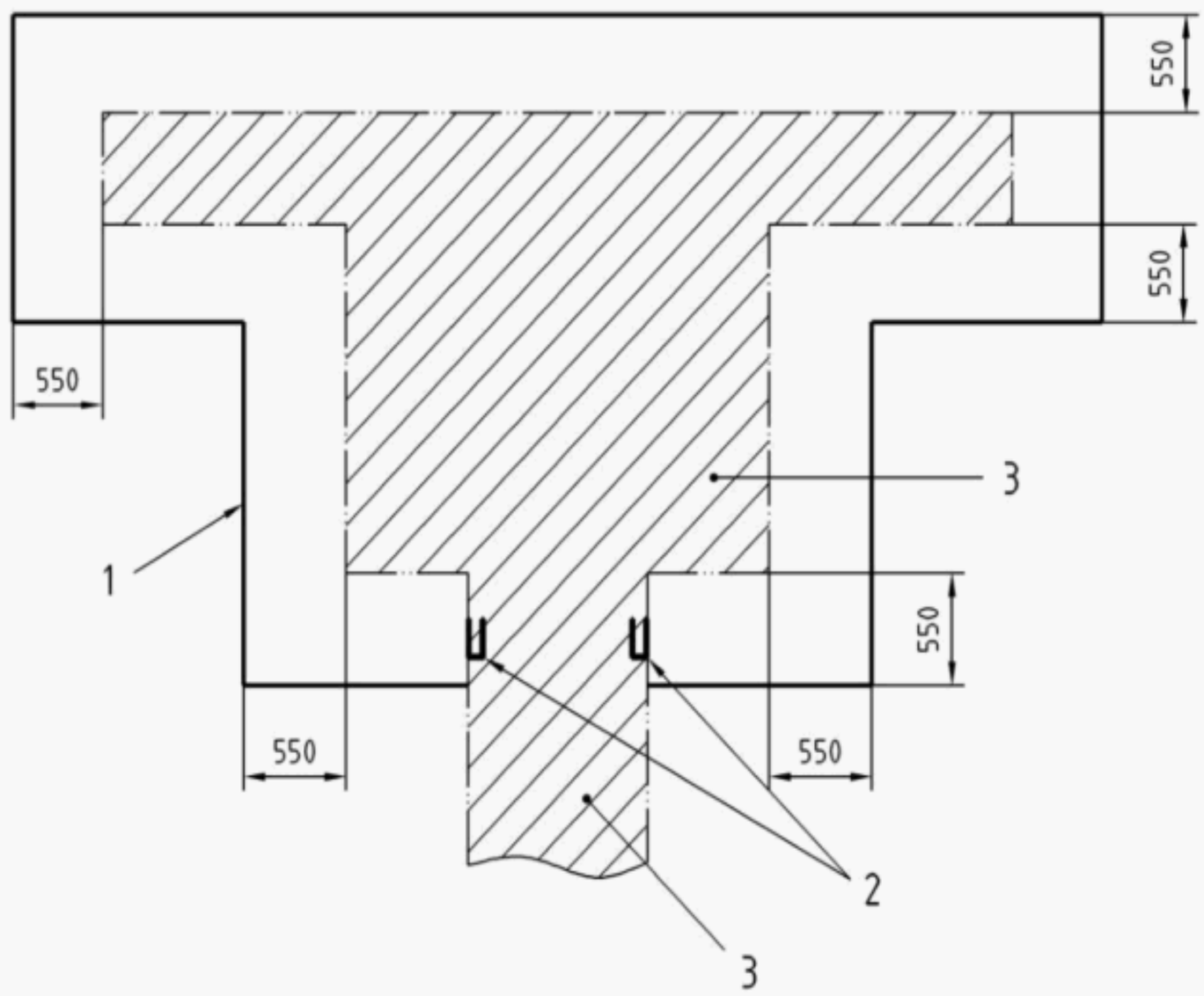

Figure 2a

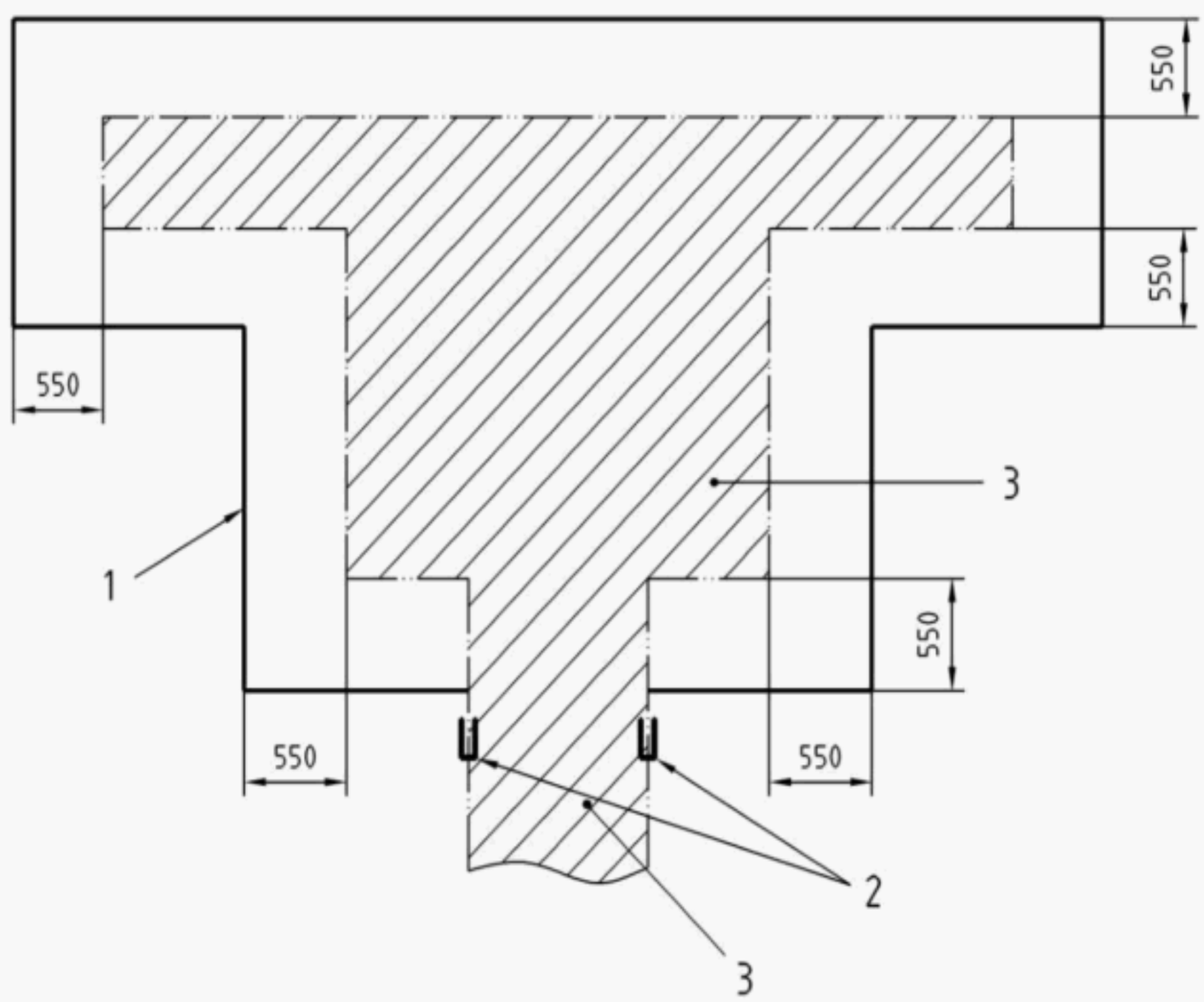

Figure 2b

Key

1 Outer limits of the machine 2
Lower coupling points
3 Area where the manual controls for the adjustments shall not be located

Figure 2 — Area where the manual controls for the adjustments shall not be located

5.3 Swivelling and movable components

5.3.1 To limit the risk associated with overhead power lines, the swivelling and movable components shall be capable of folding and unfolding without exceeding a height of 4 m.

See Clause 6 for verification.

5.3.2 The requirement of 5.3.1 does not apply during release of the folded components from the transport position, and during positioning of the folded components into the transport position.

Swivelling and movable components that can be manually folded/unfolded shall be fitted with two handles located at a distance of at least 300 mm from the nearest articulation. These handles may be integral parts of the components, provided they are ergonomically designed and clearly identified.

In the case of powered operation, the control shall be of the hold-to-run type and the manual control shall be located outside the swivelling zone.

A device shall be provided to prevent the component from moving when it is in the transport position. If this locking device is a hydraulic valve not directly fitted to the cylinder, the bursting pressure of the circuit's components from the valve to the cylinder shall be 4 times its maximum working pressure.

The unlocking and the unfolding of the components shall be controlled by separate actions from the operator.

5.3.3 A movement of the folded or drawn-in component when travelling with the component in the folded or drawn-in position shall be prevented by:

- its location so that gravity prevents a movement; or
- a locking device.

This shall be verified by inspection and the following test: the requirement is met if folded or drawn-in parts remain in their folded or drawn-in position when the machine is tipped to 60° in all directions. It may be checked by calculation. See also 7.1 l).

5.3.4 The locking device, if any, shall be strong enough to withstand forces which can be applied on it by the manoeuvring of the folded or drawn-in parts. This shall be verified by measurement, inspection and the test described in 5.3.3.

5.3.5 The unlocking and the unfolding of the swivelling and movable component shall be controlled by separate actions from the operator. See 4.1.7.3 of EN 1553:1999. This shall be verified by inspection. See also 7.1 l).

5.4 Hoppers

5.4.1 A flexible or rigid cover of the hopper, which remains attached to the hopper shall be provided. Hopper covers shall be provided with handle(s). This (these) handle(s) may be integral part(s) of the cover, provided it is (they are) suitably designed and clearly identified (e.g. by its shape or colour). To prevent any unintentional closing (for example due to the wind), the covers with a mass ≥ 300 g shall be designed in such a way they can be closed only by an intentional action from the operator. This shall be verified by inspection.

5.4.2 In addition to the requirements already given in 4.1.7.1 of EN 1553:1999, the following ones apply to all seed drills. To ensure the safety of the operator on hoppers where there are crushing and shearing points or moving components such as rotating agitators or feed augers:

a) the safety distances given in Tables 1, 3, 4 and 6 of EN 294:1992 shall be met. This does not apply to machines with ground-wheel-driven agitator;

b) where applicable, one or more device(s) (e.g. a hand rake) shall be provided. A location on the machine in the filling area shall be provided for the storage of this (these) device(s).

This shall be verified by measurement and inspection. See also 7.1 b), 7.1 i) and 7.1 j).

5.5 Loading

5.5.1 Safe access to loading location

The height for a loading, either manually or with large bags, measured as the vertical distance between the upper edge of the hopper at the loading location and the surface of the ground or the operator platform, in the position defined in the instruction handbook, shall not exceed 1 250 mm (see Figure 3). This shall be verified by measurement. See also 7.1 d) and 7.1 o)

If a platform is provided for manual loading and/or levelling the seed in the hopper, this platform shall be continuous unless prevented by the construction of the drill. In this case, the platform may consist of several parts. In case the platform is narrower than the hopper, provisions to indicate the end of a platform to the operator shall be provided. These provisions shall not constitute an obstacle of access. This shall be verified by inspection.

In addition, the platform shall meet the following requirements:

the minimum width of the platform shall be 450 mm, the minimum depth from back to front shall be 300 mm, and the minimum area shall be 0,18 m² except for single seed drills with a central hopper. For these machines, the minimum width shall be 240 mm and the minimum depth shall be 600 mm (see Figures 4a, 4b and 4c). For single seed drills with a central hopper (see Figure 4c), there shall be at least one central platform when the width of the hopper is ≤ 1 500 mm and at least two platforms when the width of the hopper is > 1 500 mm;

the distance between the edge of the hopper or the edge of the opened cover and the vertical plane through the edge of the platform shall be 200 mm maximum (see Figure 3);

a handrail or handhold(s) shall be provided between the hopper and the platform. This (these) handrail/handhold(s) may be an integral part(s) of the hopper provided it (they) is (are) suitably designed.

The requirements described in this subclause also apply when loading is made with large bags.

This shall be verified by measurement and inspection. See also 7.1 o).

Dimensions in millimetres

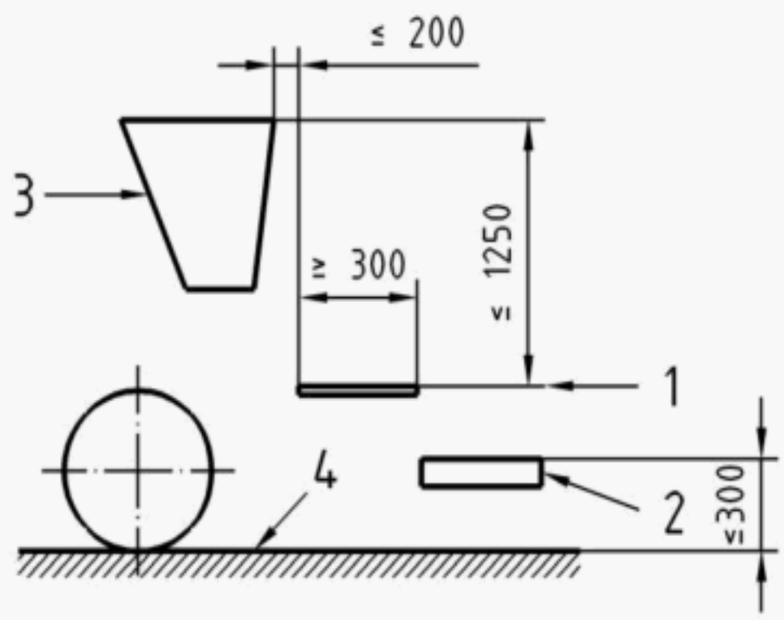

Key

1 Platform
2 Step
3 Hopper
4 Ground

Figure 3 — Loading location

Dimensions in millimetres

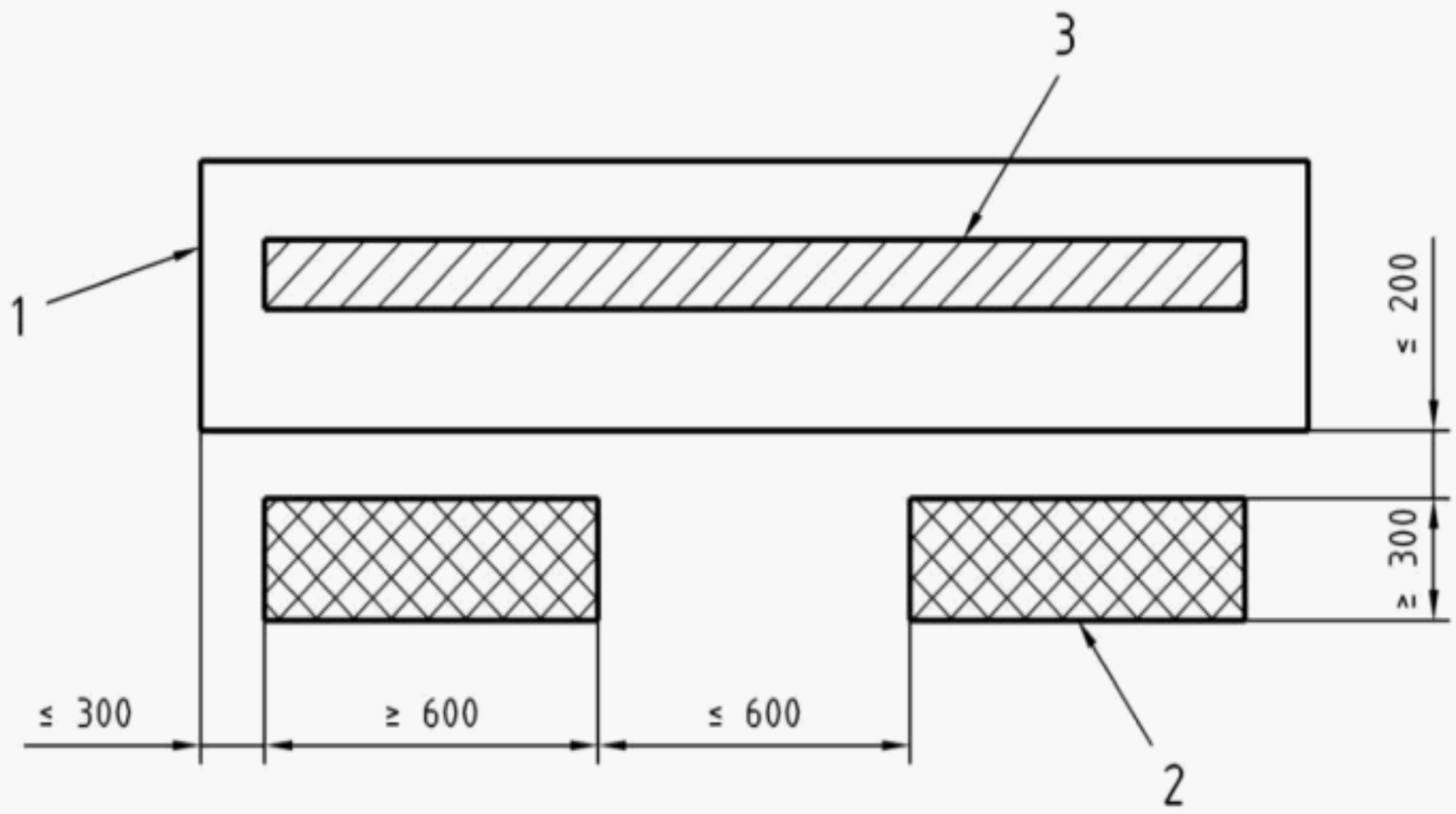

Key

1 Hopper 2

Platform

3 Area of dosage device

Figure 4a — Seed drills with hopper for loading and levelling over the whole width

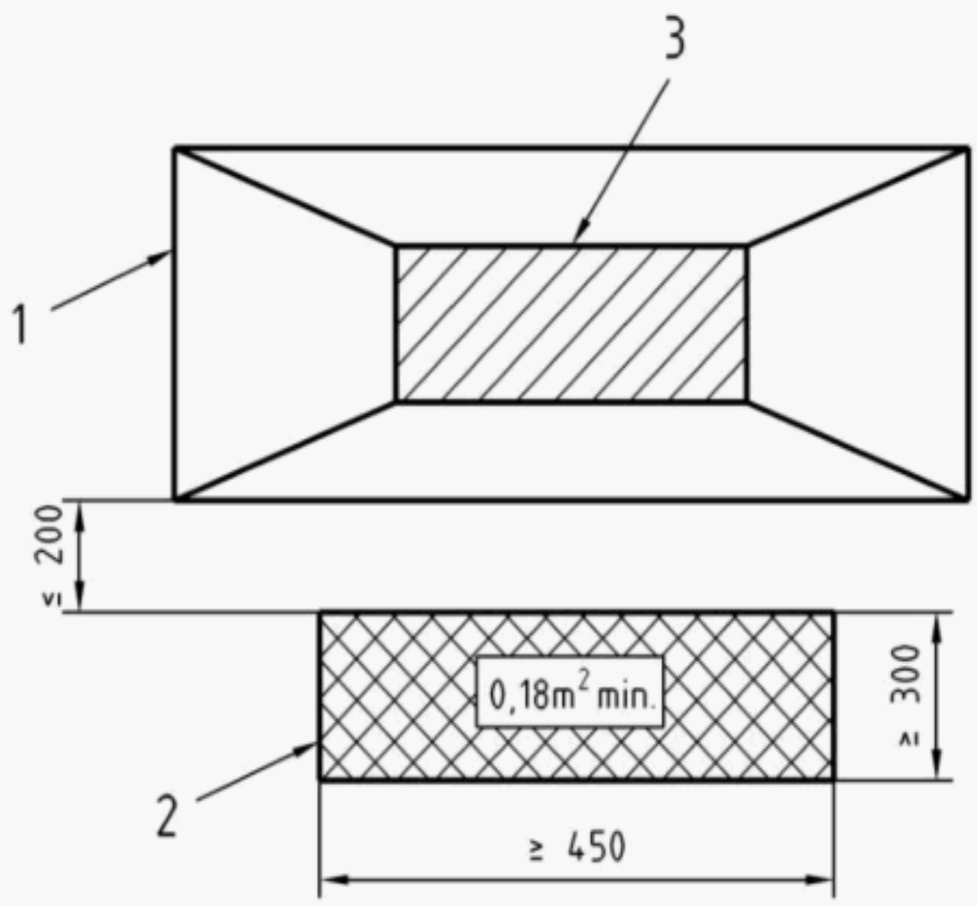

Key

1 Hopper

2 Platform

3 Area of dosage device

Figure 4b — Seed drills with hopper for centralised loading

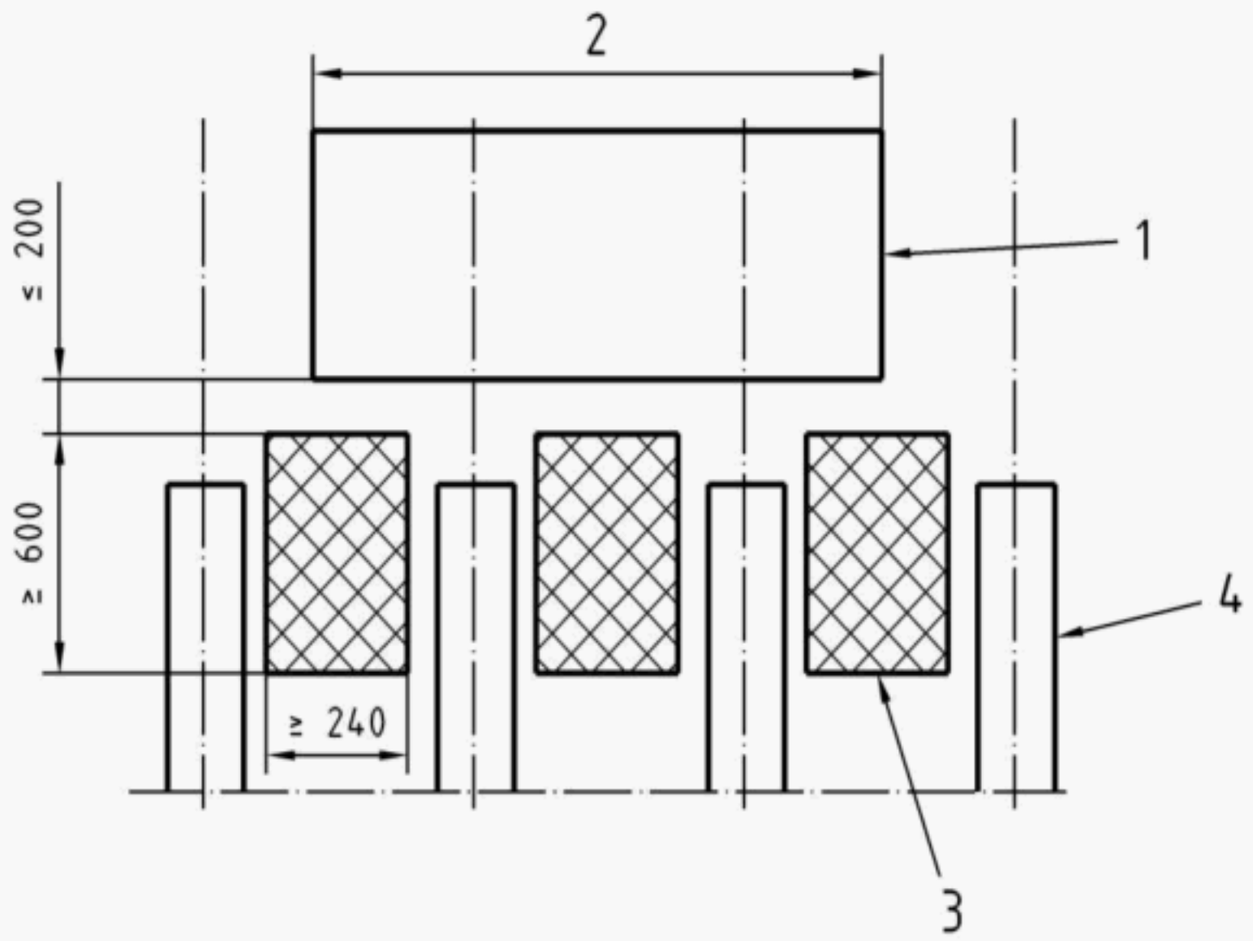

Key

1 Contour of hopper opening

2 Width of the hopper

3 Platform

4 Seeding unit

NOTE The minimum number of platforms is linked to the width of the hopper. See 5.5.1.

Figure 4c — Single seed drill with a central hopper

Figure 4 — Dimensions of platforms

5.5.2 Boarding means to loading location

The approach to the loading location shall be freely accessible so that the operator does not need to climb over or onto machine components in order to reach the boarding means.

Boarding means shall comply with 4.1.5 of EN 1553:1999 and with the requirements given below. All the distances are given in Figure 5.

If the vertical height of the platform above the ground exceeds 300 mm, a boarding means with an inclination from the horizontal of less than 70° shall be provided (see Figure 5).

The vertical distance between the lowest step and the ground shall not exceed 300 mm. The steps shall have at least a depth of 200 mm (see Figure 5) and at least a width of 300 mm except for single seed drills. For these machines, the width of the steps shall be at least 240 mm.

The boarding means to a platform located more than 1 200 mm above the ground shall be fitted with at least one handrail or handholds suitably located.

The lower end of the handrail/handhold shall be located at a maximum horizontal distance of 400 mm from the edge of the first step.

Other boarding means, if available, shall meet the requirements of 4.1.6 of EN 1553:1999.

This shall be verified by measurement and inspection.

Movable elements shall be so arranged that they cannot come in contact with the power take-off drive shaft.

Dimensions in millimetres

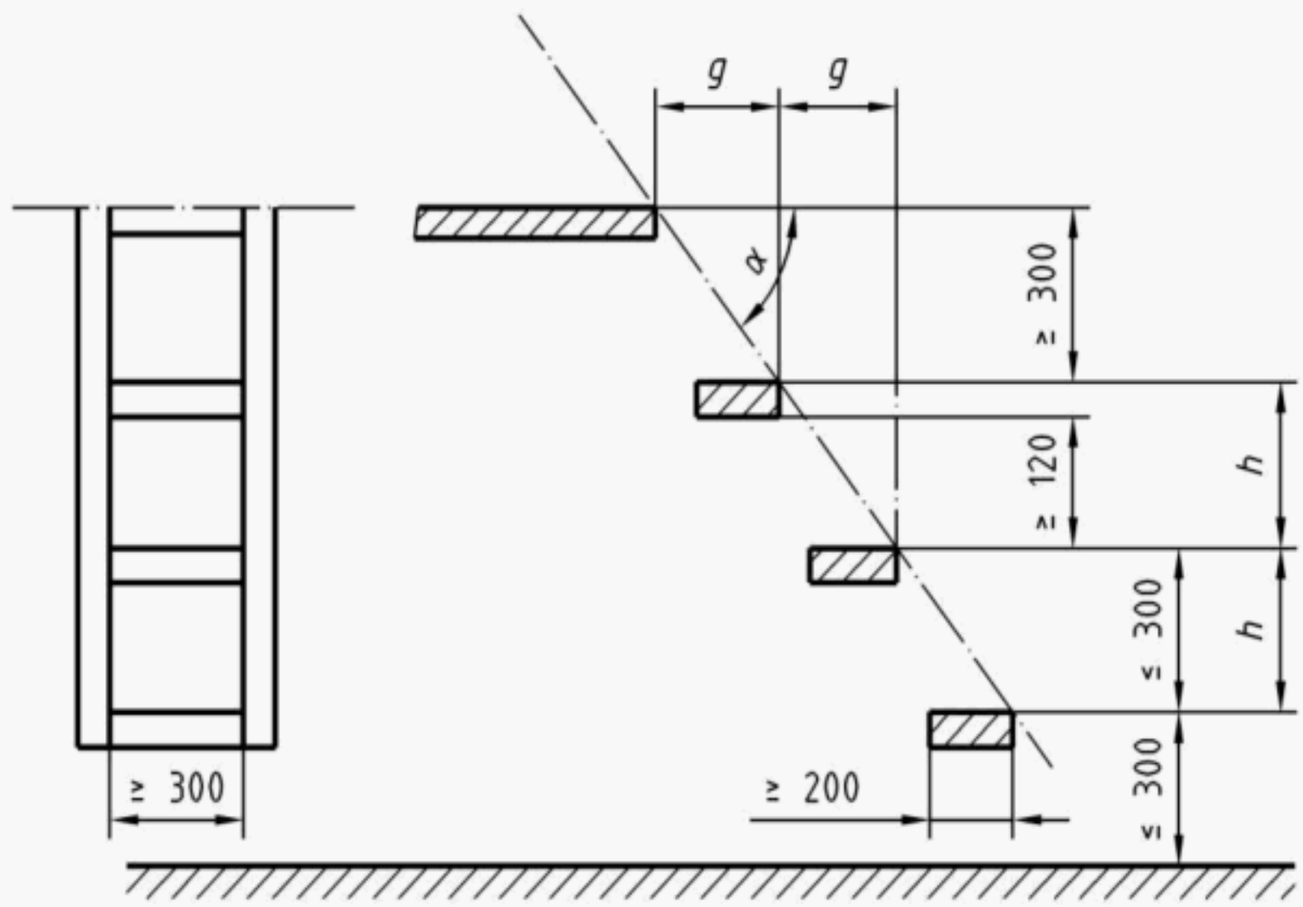

Key

h going (height between two successive steps)
g rise (depth between two successive steps)

Figure 5 — Dimensions of boarding means for manual loading location

5.6 Single seed drills

In addition to the requirements already given in 5.4.2, the following ones apply only to single seed drills:

a) ground-wheel-driven power transmission parts shall be covered at the outer side of the outer seeding units. If seeding units are interchangeable, the instruction handbook shall specify that only those units with covered power transmission parts shall be fitted on the outside of the seed drill.

   This shall be verified by inspection. See also 7.1 g) and 7.1 m);

b) any drive part (shaft, pinion, drive chains) which is located at a distance less than 850 mm from the outside edges of the machine and/or from the platform shall be guarded against drawing-in, trapping or entanglement hazards.

   This shall be verified by measurement. See also 7.1 h).

5.7 Blower

When a seed drill is fitted with a blower, the blower shall be placed or protected in such a way that when the machine is operating, it shall not be able to draw in or discharge foreign matter which could injure the operator. This shall be verified by inspection.

Actuation and intake area of the blower shall be secured by fixed guards. The guards can be a combination of mesh and/or imperforated guards. In addition, the safety distances shall comply with those given in Tables 1, 3, 4 and 6 of EN 294:1992. This shall be verified by measurement.

5.8 Flow rate calibration system

When a seed drill is supplied with a flow rate calibration system, it shall be possible for the operator to use it without going beneath the machine during the calibration test and while the seed is falling or the machine is working. This shall be verified by inspection.

5.9 Hitching and clearance zone

For mounted machines, a sufficient clearance between the machine and the tractor (or the machine and the soil working machine) shall be ensured for the connection of the driving elements (e.g. transmission), if provided, and/or the steering elements (e.g. electric/hydraulic remote control). This shall be achieved by:

- an increase of the clearance zone given in Figure 6 at least on one side so that it is possible to connect the driving and/or steering elements after having coupled the seed drill; or
- design of the driving and steering elements so that their connection is possible before coupling the seed drill in a comparable clearance zone according to Figure 6.

This shall be verified by measurement and inspection. See also 7.1 n).

Dimensions in millimetres

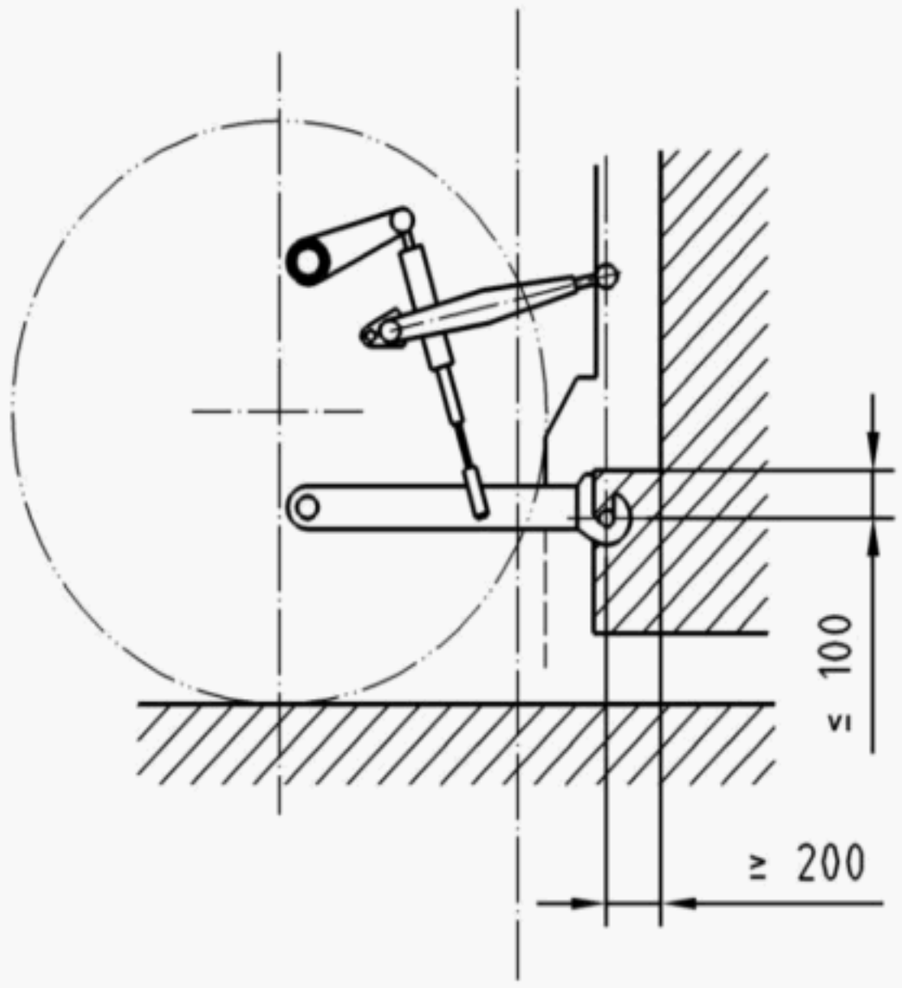

a) Side view

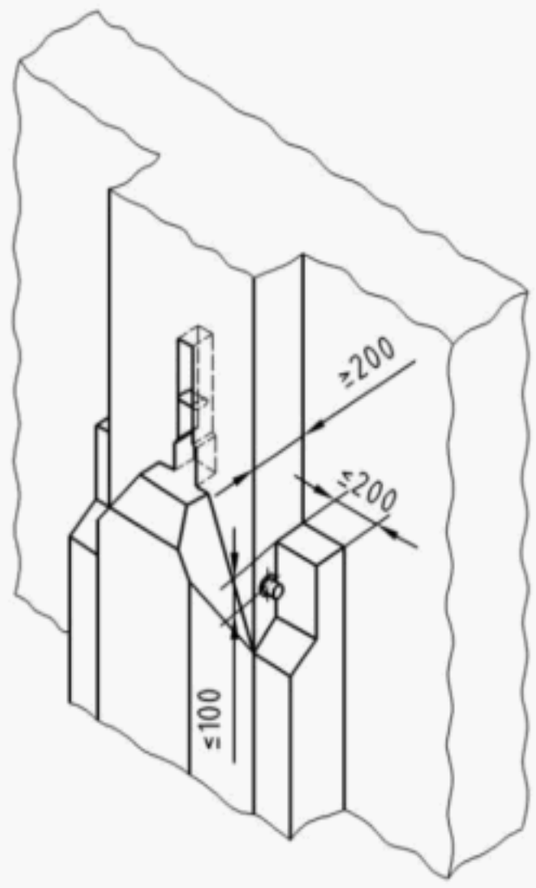

b) Global view

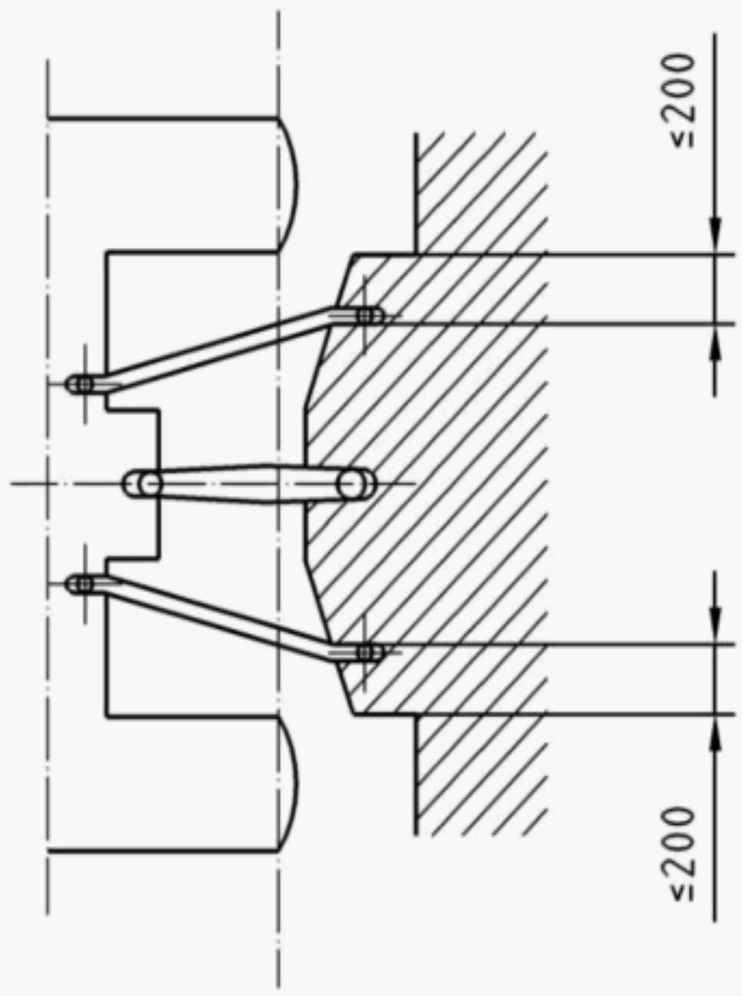

c) Top view

Figure 6 — Clearance zone

5.10 Noise

5.10.1 Noise reduction as a safety requirement

5.10.1.1 Reduction at source by design and by protective measures

The machine shall be designed to generate a noise level as low as practicable. The main sources causing noise are:

- blower (applicable only for pneumatic machines);
- drilling device;
- vibrating surfaces.

Machines shall be designed and constructed taking into account the available information and technical measures to control noise at source at the design stage, as described in EN ISO 11688-1.

NOTE EN ISO 11688-2 gives useful information on noise generation mechanisms in machinery.

5.10.1.2 Reduction by information

If after taking all possible technical measures for reducing noise at the design stage a manufacturer considers that further protection of the operator is necessary, then adequate information shall be given in the instruction handbook (see 7.1 p)).

5.10.2 Verification of requirements on noise based on noise emission values

For the determination of the sound power level and of the emission sound pressure level at the operator's position the noise test code given in EN 1553:1999, Annex D shall be used.

6 Verification of the safety requirements and/or protective measures

Swivelling and movable components

The requirement of 5.3.1 shall be verified by measurement as follows: the height of 4 m shall be measured with machine on horizontal level ground

7 Information for use

7.1 Instruction handbook

Comprehensive instructions and information on all aspects of maintenance and the safe use of the machine, including suitable clothing and personal protective equipment (PPE) requirements and the need for training if necessary, shall be provided by the manufacturer in the instruction handbook. Useful information for the drafting of the instruction handbook is given in 5.5 of EN ISO 12100-2:2003.

In particular the following points shall be emphasised (residual risks):

a) hazards resulting from a combination, association or coupling of equipment, in particular with soil working machines (see 5.2);

b) hazards caused by moving components in the hopper (see 5.4);

c) that nobody shall stand nearby the machine when it is moving (in particular the hazards related to the contact with markers shall be pointed out) (see 5.2);

d) the safe procedures for the adjustments, calibration and loading (see 5.5.1, 5.8);

e) that the operator shall avoid wearing loosely fitting clothes which could become entangled with moving parts (see 5.3.2);

f) the need to wear personal protective equipment (PPE) when necessary (see 5.8);

g) the hazards during removal and refitting of the seed units and the instructions to be followed for their handling (see 5.6);

h) the need to use a PTO drive shaft equipped with a guard in good condition (see 5.6);

i) the conditions of use to prevent blockages occurring (e.g. to avoid the use of damp seed) (see 5.4);

j) the hazards relating to clearing blockages (e.g. blockages in the coulters due to incorrect lowering of the machine to the ground) and the procedures to be followed (see 5.4);

k) the risk of unintentional contact with overhead power lines where this is possible during application operations e.g. due to uneven ground or use of swivelling and movable components, requires a risk assessment to be completed before any seeding operation commences in the area to be operated by the machine (see 5.3.1);

l) the need to check that the unlocking procedure does not cause the swivelling and movable components to fall down in an uncontrolled way (especially important with new machines) (see 5.3.3, 5.3.4 and 5.3.5);

m) which seed units have to be fitted on the outside of the machine in case of interchangeable seeding units (see 5.6);

n) instructions concerning the use of automatic and semi-automatic hitching, when provided (see 5.9);

o) the need to follow advice concerning manual handling of heavy loads and/or the need to follow correct procedures for sack handling and lifting (see 5.5);

p) the instruction handbook and the technical documentation describing the machine prepared by the manufacturer for the information of potential users shall (see 5.10):

give the declared noise emission values of the machinery as follows:

the A-weighted sound pressure level at workstations, where this exceeds 70 dB. Should the sound pressure level not exceed 70 dB, this fact shall be indicated;

the peak C-weighted emission sound pressure level at workstations, where this exceeds 63 Pa (130 dB in relation to 20 μPa);

the A-weighted sound power level emitted by the machine where the A-weighted emission sound pressure level at any workstation exceeds 85 dB;

give reference to the noise test code specified in Annex D of EN 1553:1999;

recommend the use of low-noise operating modes, and/or limited time of operation, if necessary;

give a statement of the noise level and recommend the use of ear protection, if necessary.

In addition the following points should be emphasised (additional information for the user):

q) that people shall not ascend onto the machine while operating;

r) the fact that the load can influence tractor manoeuvrability and that if the balance of the machine is affected when partially unloaded, then care shall be taken (see Annex B which gives recommendations for calculations to be used to ensure stability of the tractor/seed drill combination).

7.2 Marking

All machines shall be marked legibly and indelibly with at least the following information:

name and address of the manufacturer;

year of construction;

designation of series or type, if any;

serial number, if any;

mass of the machine, when empty in its basis configuration;

maximum pay load.

In addition, warnings shall be affixed on the machine drawing attention to:

that it is dangerous to ascend onto the machine while it is moving; this warning is to be affixed near the means of access, if any;

hazards caused by moving parts (hopper).

Examples of pictograms are given in Annex C.

Annex A

(informative)

Examples of seed drills

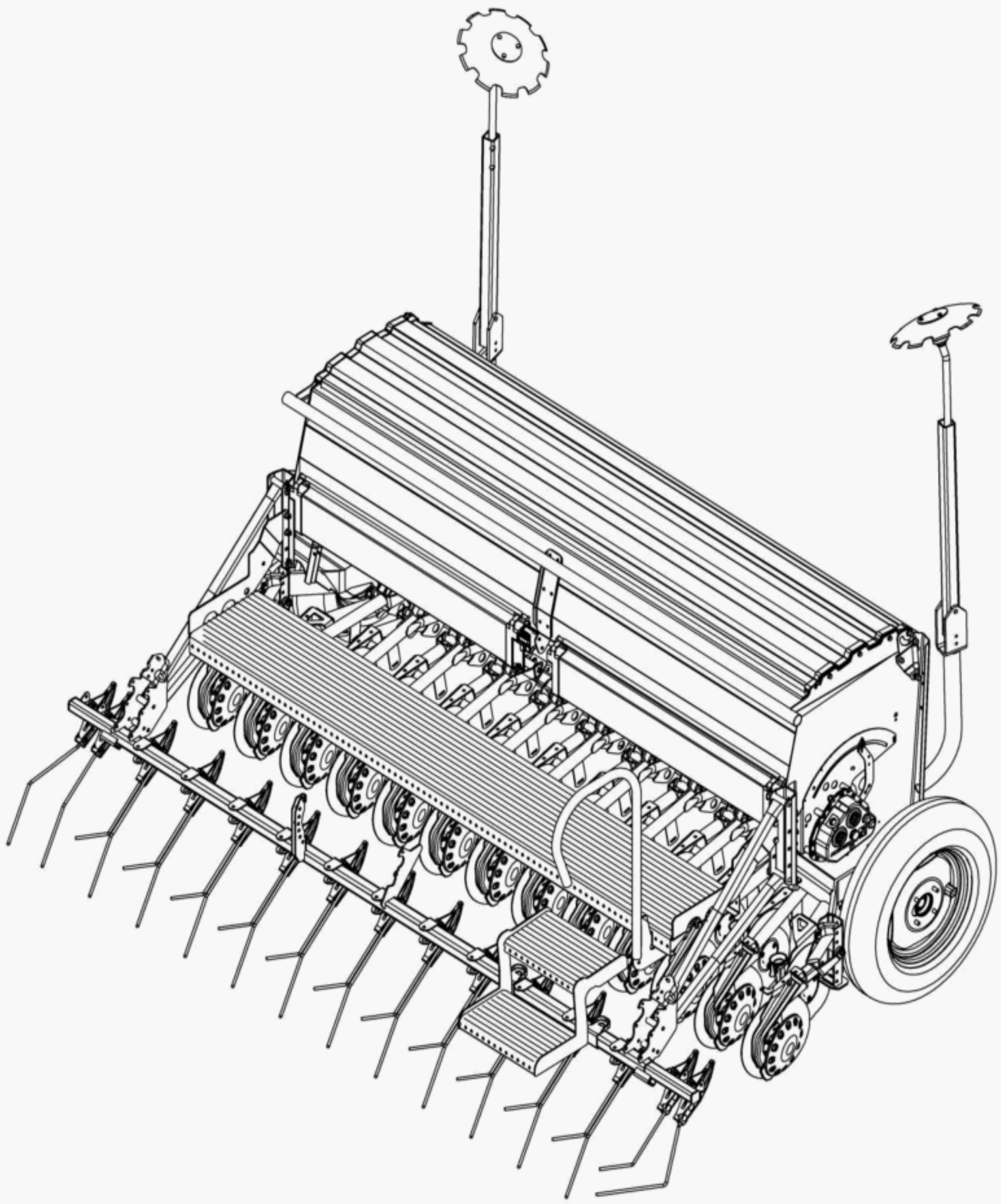

Figure A.1 — Mechanical seed drill

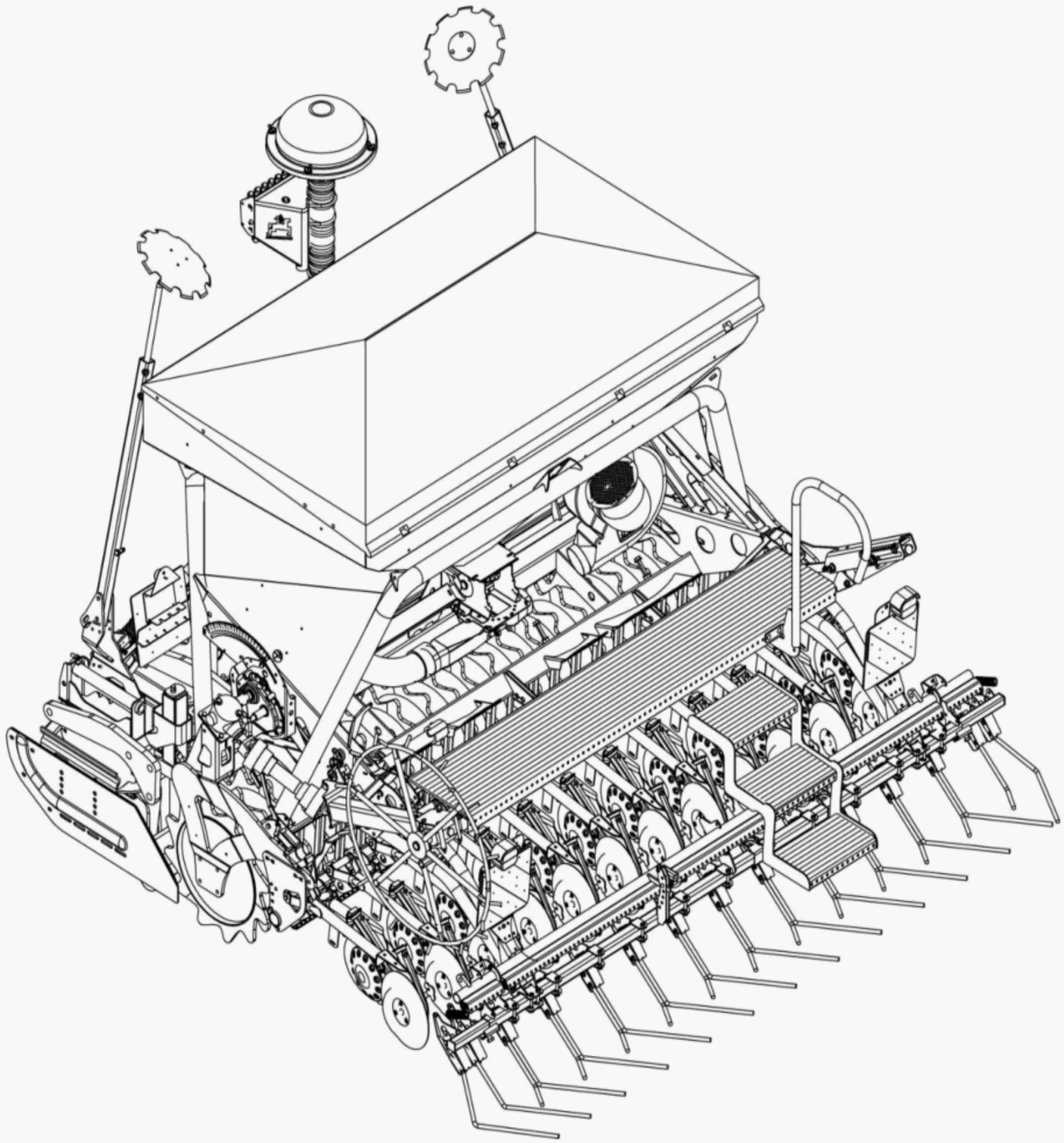

Figure A.2 — Pneumatic seed drills

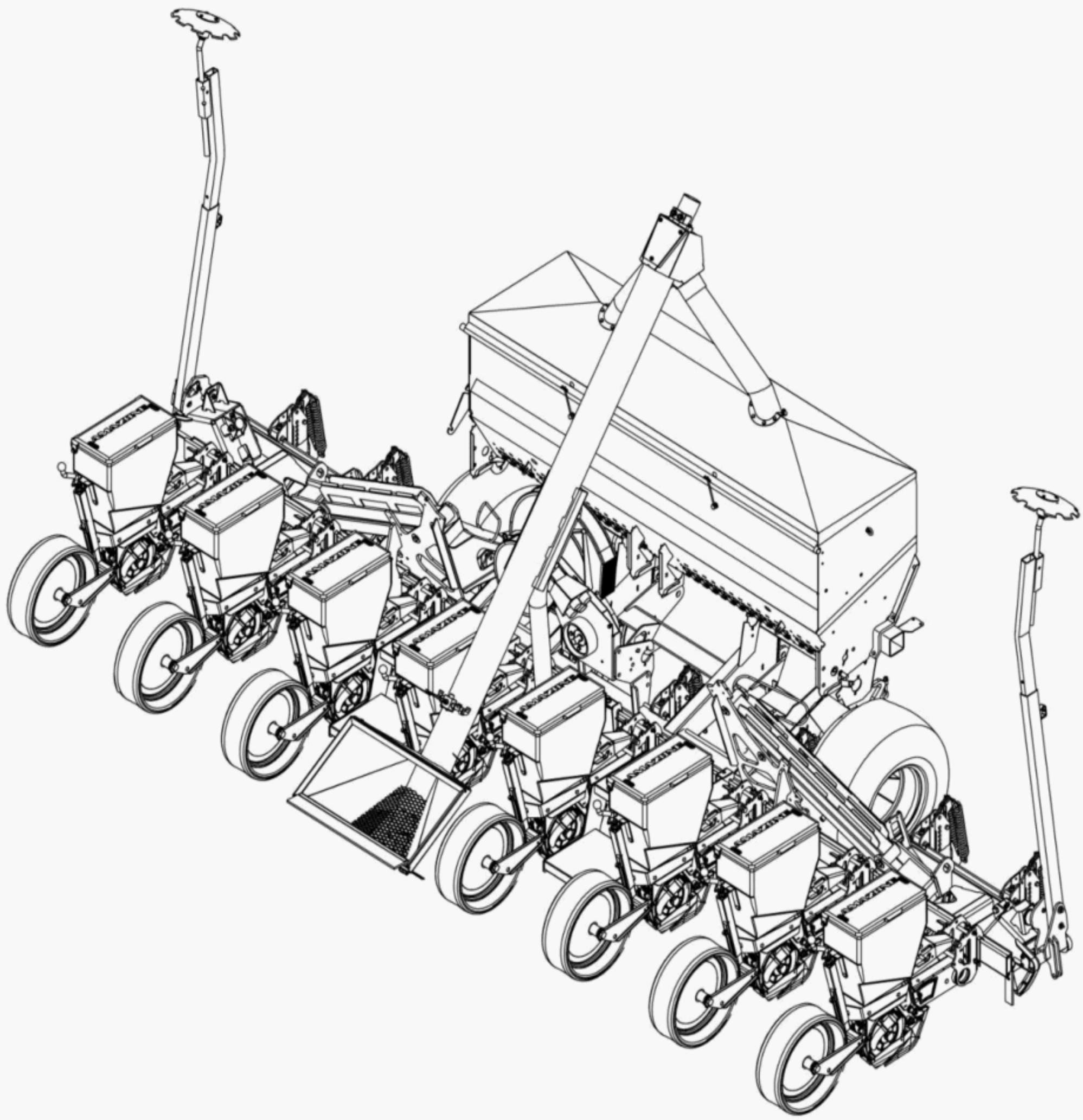

Figure A.3 — Single seed drills

Annex B

(informative)

Stability of the tractor-seed drill combination

This annex is related to 7.1 r), in which there is the requirement to give information concerning the possible loss of stability of the tractor due to the connection with the seed drill.

The following text is a suggestion to the manufacturer to enable him to provide adequate and complete information.

The example suggested refers to a seed drill mounted on a tractor.

Due to the mass of the machine itself and of the materials present in the hopper, the tractor-seed drill combination may become unstable. In order to verify the total stability, the following expression can be applied for the calculation of the minimum ballasting at the front $I_{F,min}$, which allows to have a weight on the front axle equal to 20 % of the unladen weight of the tractor:

$$I_{F,min} = \frac{(I_R \times (c + d)) + (T_F \times b) + (0{,}2 \times T_E \times b)}{a + b} \qquad \text{(B.1)}$$

NOTE Rear mounted implement and front/rear combinations are considered for this calculation.

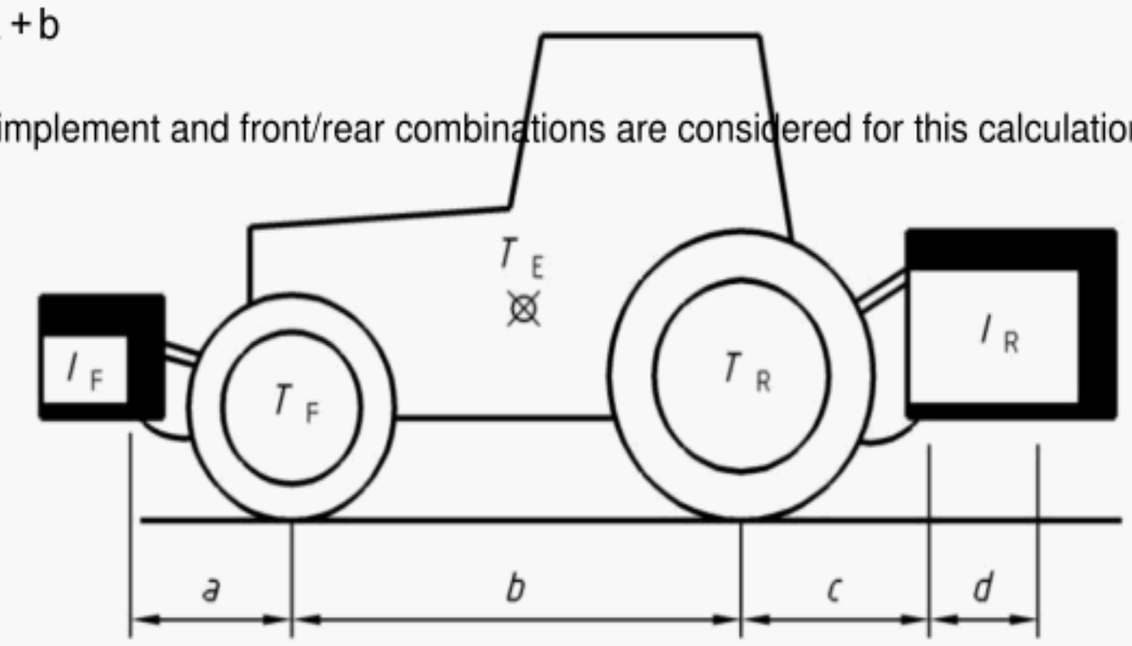

Key

T_E [kg]	Unladen weight of tractor	n
T_F [kg]	Front axle load of unladen tractor	n
T_R [kg]	Rear axle load of unladen tractor	n
I_R [kg]	Combined weight of rear mounted implement/rear ballast	o
I_F [kg]	Combined weight of front mounted implement/front ballast	o
a [m]	Distance from centre of gravity for combined front mounted implement/front ballast to front axle centre	op
b [m]	Tractor wheelbase	np
c [m]	Distance from rear axle centre to centre of lower link balls	np
d [m]	Distance from centre of lower link balls to centre of gravity for combined rear mounted implement/rear ballast	o

n see instruction handbook of the tractor

o see price list and/or instruction handbook of the implement p

to be measured

Figure B.1 — Example of instructions for stability of the tractor distributor combination

Annex C
(informative)

Examples of pictograms

Figure C.1 — Hazards caused by moving parts

Figure C.2 — Ascending onto the machine when it is moving is dangerous

Annex ZA

(informative)

Relationship between this European Standard and the Essential Requirements of EU Directive 98/37/CE, amended by Directive 98/79/CE

This European Standard has been prepared under a mandate given to CEN by the European Commission and the European Free Trade Association to provide one means of conforming to Essential Requirements of the New Approach Machinery Directive 98/37/CE, amended by Directive 98/79/CE.

Once this European Standard is cited in the Official Journal of the European Communities under that Directive and has been implemented as a national standard in at least one Member State, compliance with the normative clauses of this European Standard confers, within the limits of the scope of this European Standard, a presumption of conformity with the relevant Essential Requirements, except Essential Requirements 1.2.6, 1.2.7, 1.3.2, 1.5.2, 1.5.11, 3.2.1 (only 1st paragraph, 3rd sentence), 3.3.2, 3.3.3, 3.3.4, 3.3.5, of that Directive and associated EFTA regulations.

WARNING: Other requirements and other EU Directives may be applicable to the product(s) falling within the scope of this European Standard.

Bibliography

[1] EN 708:1996, *Agricultural machinery – Soil working machines with powered tools – Safety*

[2] EN 708:1996/A1:2000, *Agricultural machinery – Soil working machines with powered tools – Safety*

[3] EN 13740-1:2003, *Agricultural machinery – Solid fertilizer line-distributors – Environmental protection – Part 1: Requirements*

[4] EN 13740-2:2003, *Agricultural machinery – Solid fertilizer line-distributors – Environmental protection – Part 2: Test methods*

[5] prEN 14017:2005, *Agricultural and forestry machinery – Solid fertilizer distributors – Safety*

[6] EN ISO 11688-2:2000, *Acoustics – Recommended practice for the design of low-noise machinery and equipment – Part 2: Introduction to the physics of low-noise design (ISO/TR 11688-2:1998)*

BS EN 14018:2005

BSI — British Standards Institution

BSI is the independent national body responsible for preparing British Standards. It presents the UK view on standards in Europe and at the international level. It is incorporated by Royal Charter.

Revisions

British Standards are updated by amendment or revision. Users of British Standards should make sure that they possess the latest amendments or editions.

It is the constant aim of BSI to improve the quality of our products and services. We would be grateful if anyone finding an inaccuracy or ambiguity while using this British Standard would inform the Secretary of the technical committee responsible, the identity of which can be found on the inside front cover. Tel: +44 (0)20 8996 9000. Fax: +44 (0)20 8996 7400.

BSI offers members an individual updating service called PLUS which ensures that subscribers automatically receive the latest editions of standards.

Buying standards

Orders for all BSI, international and foreign standards publications should be addressed to Customer Services. Tel: +44 (0)20 8996 9001. Fax: +44 (0)20 8996 7001. Email: orders@bsi-global.com. Standards are also available from the BSI website at http://www.bsi-global.com.

In response to orders for international standards, it is BSI policy to supply the BSI implementation of those that have been published as British Standards, unless otherwise requested.

Information on standards

BSI provides a wide range of information on national, European and international standards through its Library and its Technical Help to Exporters Service. Various BSI electronic information services are also available which give details on all its products and services. Contact the Information Centre. Tel: +44 (0)20 8996 7111. Fax: +44 (0)20 8996 7048. Email: info@bsi-global.com.

Subscribing members of BSI are kept up to date with standards developments and receive substantial discounts on the purchase price of standards. For details of these and other benefits contact Membership Administration. Tel: +44 (0)20 8996 7002. Fax: +44 (0)20 8996 7001. Email: membership@bsi-global.com.

Information regarding online access to British Standards via British Standards Online can be found at http://www.bsi-global.com/bsonline.

Further information about BSI is available on the BSI website at http://www.bsi-global.com.

Copyright

Copyright subsists in all BSI publications. BSI also holds the copyright, in the UK, of the publications of the international standardization bodies. Except as permitted under the Copyright, Designs and Patents Act 1988 no extract may be reproduced, stored in a retrieval system or transmitted in any form or by any means – electronic, photocopying, recording or otherwise – without prior written permission from BSI.

This does not preclude the free use, in the course of implementing the standard, of necessary details such as symbols, and size, type or grade designations. If these details are to be used for any other purpose than implementation then the prior written permission of BSI must be obtained.

Details and advice can be obtained from the Copyright & Licensing Manager. Tel: +44 (0)20 8996 7070. Fax: +44 (0)20 8996 7553. Email: copyright@bsi-global.com.

BSI

389 Chiswick High Road

London

W4 4AL