Transportable gas cylinders — Refillable welded steel gas cylinders — Design and construction —

Part 1: Carbon steel

The European Standard EN 13322-1:2003 has the status of a British Standard

ICS 23.020.30

British Standards

National foreword

This British Standard is the official English language version of EN 13322-1:2003. It partially supersedes BS 5045-2:1989 for welded steel cylinders between 0.5 litres and 150 litres.

The UK participation in its preparation was entrusted by Technical Committee PVE/3, Gas containers, to Subcommittee PVE/3/3, Transportable gas cylinders — Cylinder design, which has the responsibility to:

- aid enquirers to understand the text;
- present to the responsible international/European committee any enquiries on the interpretation, or proposals for change, and keep the UK interests informed;
- monitor related international and European developments and promulgate them in the UK.

A list of organizations represented on this subcommittee can be obtained on request to its secretary.

Cross-references

The British Standards which implement international or European publications referred to in this document may be found in the BSI Catalogue under the section entitled “International Standards Correspondence Index”, or by using the “Search” facility of the BSI Electronic Catalogue or of British Standards Online.

This publication does not purport to include all the necessary provisions of a contract. Users are responsible for its correct application.

Compliance with a British Standard does not of itself confer immunity from legal obligations.

This British Standard was published under the authority of the Standards Policy and Strategy Committee on 13 March 2003

Summary of pages

This document comprises a front cover, an inside front cover, the EN title page, pages 2 to 47 and a back cover.

The BSI copyright date displayed in this document indicates when the document was last issued.

Amendments issued since publication

Amd. No.	Date	Comments

© BSI 13 March 2003

ISBN 0 580 41423 X

EUROPEAN STANDARD

NORME EUROPÉENNE

EUROPÄISCHE NORM

EN 13322-1

March 2003

ICS 23.020.30

English version

Transportable gas cylinders - Refillable welded steel gas cylinders - Design and construction - Part 1: Carbon steel

Bouteilles à gaz transportables - Bouteilles à gaz rechargeables soudées en acier - Conception et construction - Partie 1: Acier au carbone

Ortsbewegliche Gasflaschen - Wiederbefüllbare geschweißte Flaschen aus Stahl - Gestaltung und Konstruktion - Teil 1: Flaschen aus Kohlenstoffstahl

This European Standard was approved by CEN on 28 November 2002.

CEN members are bound to comply with the CEN/CENELEC Internal Regulations which stipulate the conditions for giving this European Standard the status of a national standard without any alteration. Up-to-date lists and bibliographical references concerning such national standards may be obtained on application to the Management Centre or to any CEN member.

This European Standard exists in three official versions (English, French, German). A version in any other language made by translation under the responsibility of a CEN member into its own language and notified to the Management Centre has the same status as the official versions.

CEN members are the national standards bodies of Austria, Belgium, Czech Republic, Denmark, Finland, France, Germany, Greece, Hungary, Iceland, Ireland, Italy, Luxembourg, Malta, Netherlands, Norway, Portugal, Slovak Republic, Spain, Sweden, Switzerland and United Kingdom.

EUROPEAN COMMITTEE FOR STANDARDIZATION
COMITÉ EUROPÉEN DE NORMALISATION
EUROPÄISCHES KOMITEE FÜR NORMUNG

Management Centre: rue de Stassart, 36 B-1050 Brussels

© 2003 CEN All rights of exploitation in any form and by any means reserved worldwide for CEN national Members.

Ref. No. EN 13322-1:2003 E

Contents

page

Foreword....3

Introduction....4

1 Scope....5

2 Normative references....5

3 Terms, definitions and symbols....6

4 Materials and heat treatment....8

5 Design....8

6 Construction and workmanship....12

7 New design tests....15

8 Batch tests....17

9 Tests on every cylinder....25

10 Failure to meet test requirements....25

11 Records....26

12 Marking....26

Annex A (normative) Cylinders made from longitudinal seam high frequency induction (HFI) welded tube by spinning of the end....27

Annex B (normative) Radiographic examination of welds....29

Annex C (normative) Description, evaluation of manufacturing defects and conditions for rejection of welded steel gas cylinders at time of visual inspection....32

Annex D (informative) Examples of design and batch test certificates....35

Annex E (informative) Guidance on the application of conformity assessment modules when using this standard....42

Bibliography....47

Foreword

This document (EN 13322-1:2003) has been prepared by Technical Committee CEN/TC 23 "Transportable gas cylinders", the secretariat of which is held by BSI.

This European Standard shall be given the status of a national standard, either by publication of an identical text or by endorsement, at the latest by September 2003, and conflicting national standards shall be withdrawn at the latest by September 2003.

This European Standard has been submitted for reference into the RID and/or in the technical annexes of the ADR. Therefore in this context the standards listed in the normative references and covering basic requirements of the RID/ADR not addressed within the present standard are normative only when the standards themselves are referred to in the RID and/or in the technical annexes of the ADR.

For relationships with EC directives, RID and ADR see informative annex E, which is an integral part of this document.

This standard is one of a series of two standards concerning refillable welded steel gas cylinders of water capacities from 0,5 l up to and including 150 l for compressed, liquefied and dissolved gases:

Part 1: Carbon steel

Part 2: Stainless steel

Annexes A, B and C are normative. Annexes D and E are informative.

According to the CEN/CENELEC Internal Regulations, the national standards organizations of the following countries are bound to implement this European Standard: Austria, Belgium, Czech Republic, Denmark, Finland, France, Germany, Greece, Hungary, Iceland, Ireland, Italy, Luxembourg, Malta, Netherlands, Norway, Portugal, Slovak Republic, Spain, Sweden, Switzerland and the United Kingdom.

Introduction

The purpose of this European Standard is to provide a specification for the design, manufacture, and testing of refillable, transportable, welded steel gas cylinders.

The specifications given are based on knowledge of, and experience with, materials, design requirements, manufacturing processes and control during manufacture, of cylinders in common use in the countries of the CEN members.

This standard is based on the traditional calculation method. It does not cover other methods such as finite element analysis (F.E.A) methods or experimental methods.

1 Scope

This European Standard specifies minimum requirements concerning material, design, construction and workmanship, manufacturing processes and testing of refillable transportable welded carbon steel gas cylinders of water capacities from 0,5 l up to and including 150 l for compressed, liquefied and dissolved gases.

For acetylene service, additional requirements for the cylinder and the basic requirements for the porous mass are given in EN 1800. For those cylinders made from high frequency induction (HFI) welded steel tubes, the requirements are given in annex A.

This standard is primarily for industrial gases other than LPG but may also be applied for LPG. However for dedicated LPG cylinders, see EN 1442, Transportable refillable welded steel cylinders for liquefied petroleum gas (LPG) - Design and construction prepared by CEN/TC 286 Liquefied petroleum gas equipment and accessories.

2 Normative references

This European Standard incorporates by dated or undated reference, provisions from other publications. These normative references are cited at the appropriate places in the text, and publications are listed hereafter. For dated references, subsequent amendments to or revisions of any of these publications apply to this European Standard only when incorporated in it by amendment or revision. For undated references the latest edition of the publication referred to applies (including amendments).

EN 287-1, Approval testing of welders - Fusion welding - Part 1: Steels.

EN 288-1, Specification and qualification of welding procedures for metallic materials - Part 1: General rules for fusion welding.

EN 288-3, Specification and approval of welding procedures for metallic materials - Part 3: Welding procedure tests for the arc welding of steels.

EN 473, Non destructive testing - Qualification and certification of NDT personnel - General principles.

EN 962, Transportable gas cylinders - Valve protection caps and valve guards for industrial and medical gas cylinders - Design, construction and tests.

EN 970, Non-destructive examination of fusion welds - Visual examination.

EN 1089-1, Transportable gas cylinders - Gas cylinder identification (excluding LPG) - Part 1: Stampmarking.

EN 1435, Non-destructive examination of welds - Radiographic examination of welded joints.

EN 1442, Transportable refillable welded steel cylinders for liquefied petroleum gas (LPG) - Design and construction.

EN 1964-1:1999, Transportable gas cylinders - Specification for the design and construction of refillable transportable seamless steel gas cylinders of water capacities from 0,5 litre up to and including 150 litres - Part 1: Cylinders made of seamless steel with an R_m value of less than 1100 MPa.

EN 10002-1, Metallic materials - Tensile testing - Part 1: Method of test at ambient temperature.

EN 10028-1, Flat products made of steels for pressure purposes - Part 1: General requirements.

EN 10028-3, Flat products made of steels for pressure purposes - Part 3: Weldable fine grain steels, normalized.

EN 10028-5, Flat products made of steels for pressure purposes - Part 5: Weldable fine grain steels, thermomechanically rolled.

EN 10045-1, Metallic materials - Charpy impact test - Part 1: Test method.

EN 10083-1 + A1, Quenched and tempered steels - Part 1: Technical delivery conditions for special steels (includes amendment A1:1996)

EN 10120, Steel sheet and strip for welded gas cylinders.

EN 10208-2, Steel pipes for pipelines for combustible fluids - Technical delivery conditions - Part 2: Pipes of requirement class B.

EN 12517, Non-destructive examination of welds - Radiographic examination of welded joints - Acceptance levels.

EN 13445-2, Unfired pressure vessels - Part 2: Materials.

EN 25817, Arc-welded joints in steel - Guidance on quality levels for imperfections (ISO 5817:1992).

EN ISO 11114-1, Transportable gas cylinders - Compatibility of cylinder and valve materials with gas contents - Part 1: Metallic materials (ISO 11114-1:1997).

ISO 2504:1973, Radiography of welds and vewing conditions for films - Utilization of recommended patterns of image quality indicators (I.Q.I.).

3 Terms, definitions and symbols

For the purpose of this standard, the following terms, definitions and symbols apply.

3.1 Terms and definitions

3.1.1
yield stress
value corresponding to the lower yield stress, R_{eL}, or 0,92 × the upper yield stress (R_{eH}) or for steels that do not exhibit a defined yield, the 0,2 % proof stress ($R_{p0,2}$)

[EN 10002-1]

3.1.2
normalizing
heat treatment in which a cylinder is heated to a uniform temperature above the upper critical point (AC_3, as defined in EN 10052) of the steel and then cooled in a controlled atmosphere

3.1.3
stress relieving
heat treatment given to the finished cylinder, the object of which is to reduce the residual stresses without altering the metallurgical structure of the steel, by heating to a uniform temperature below the lower critical point (AC_1, as defined in EN 10052) of the steel and cooling in a still atmosphere

3.1.4
batch
quantity of finished cylinders made consecutively during the same or consecutive days to the same design, size and material specifications and from the same material supplier for each pressure containing part on the same automatic welding machines and heat-treated under the same conditions of temperature and duration

NOTE This definition allows different suppliers to be used for the different pressure containing parts within a batch, e.g. one supplier for heads, another for bases.

3.1.5
design stress factor (F)
ratio of equivalent wall stress at test pressure (p_h) to guaranteed minimum yield stress (R_e)

3.2 Symbols

a Calculated minimum thickness, in millimetres, of the cylindrical shell

a' Guaranteed minimum thickness, in millimetres, of the cylindrical shell (including any corrosion allowance see 7.1)

a_1 Calculated value of a used in the calculation of b (see 5.3.2)

A Percentage elongation after fracture

b Calculated minimum thickness, in millimetres, of the cylinder end (see Figure 1)

b' Guaranteed minimum thickness, in millimetres, of the cylinder end (see 7.1)

C Shape factor of dished ends

D Outside diameter, in millimetres, of the cylinder (see Figure 1)

D_f Diameter of former in millimetres (see Figure 11)

F Design stress factor (see 3.1.5)

h Height, in millimetres, of the cylindrical part of the end (see Figure 1)

H Outside height, in millimetres, of the domed part of the end (see Figure 1)

J Stress reduction factor (see annex B)

L Length, in millimetres, of the cylinder

n Ratio of diameter of bend test former (D_f) to the thickness of the test piece (t)

p_b Measured burst pressure, in bar[1], above atmospheric pressure, in the burst test

p_h Hydraulic test pressure, in bar[1)], above atmospheric pressure

r Inside radius of knuckle end, in millimetres (see Figure 1)

R Inside radius of the dished end, in millimetres (see Figure 1)

R_e Yield stress, in megapascals, as defined in 3.1.1 and used for design calculation

R_{ea} Value of the actual yield stress in megapascals determined by the tensile test

R_{eH} Minimum value of the upper yield stress, in megapascals, guaranteed by the cylinder manufacturer for the finished cylinder, in accordance with EN 10002-1

R_{eL} Minimum value of the lower yield stress, in megapascals, guaranteed by the cylinder manufacturer for the finished cylinder, in accordance with EN 10002-1

R_g Minimum value of tensile strength, in megapascals, guaranteed by the cylinder manufacturer for the finished cylinder

R_m Actual value of tensile strength, in megapascals, determined by the tensile test (see 8.4)

---

1 1 bar = 10^5 Pa = 0,1 MPa

S_o Original cross-sectional area of tensile test piece, in square millimetres, according to EN 10002-1

t Actual thickness of the test specimen, in millimetres (see Figure 7)

4 Materials and heat treatment

4.1 General

4.1.1 Materials supplied for shells and end pressing shall conform to EN 10120, or EN 10028-1 and EN 10028-3, or EN 10028-1 and EN 10028-5.

4.1.2 Materials supplied for bungs shall conform to EN 10083-1 + A1.

4.1.3 Grades of steel used for the manufacture shall be compatible with the intended gas service (e.g. corrosive gases, embrittling gases) in accordance with EN ISO 11114-1.

4.1.4 All parts welded to the cylinder shall be made of compatible material with respect to the weldability.

4.1.5 The welding consumables shall be such that they are capable of giving consistent welds with minimum tensile strength at least equal to that specified for the parent material in the finished cylinder.

4.1.6 The manufacturer shall obtain and provide certificates of the ladle analysis of the steel supplied for the construction of the pressure retaining parts of the cylinder.

4.1.7 The manufacturer shall be able to guarantee cylinder steel casting traceability for each cylinder.

4.1.8 Cylinders for acetylene service shall be manufactured with materials compatible with the manufacturing process of the porous mass, or an internal coating shall be applied.

4.2 Heat treatment

Cylinders shall be delivered in either the normalised or the stress-relieved condition. The cylinder manufacturer shall certify that the cylinders have been heat-treated after completion of all welding and shall certify the process of heat treatment applied. Localised heat treatment of cylinders is not permitted, nor in the case of repaired cylinders.

The actual temperature of heat treatment to which a type of steel is subjected for a given tensile strength shall not deviate by more than 30 °C from the temperature specified by the manufacturer for the cylinder type.

5 Design

5.1 General requirements

5.1.1 The calculation of the wall thickness of the pressure parts shall be related to the yield stress of the parent material.

5.1.2 For calculation purposes, the value of the yield stress R_e is limited to a maximum of 0,85 R_g.

5.1.3 The internal pressure upon which the calculation of gas cylinders is based shall be the test pressure p_h.

5.1.4 A fully dimensioned drawing including the specification of the material shall be produced.

5.1.5 Cylinders for acetylene service shall be designed to allow for a test pressure of at least 60 bar.

5.1.6 Cylinders for acetylene service shall be designed and manufactured to ensure that conditions are safe for the eventual filling of the porous mass, e.g. preventing sharp edges and voids.

5.2 Calculation of cylindrical wall thickness

The wall thickness of the cylindrical shell shall be not less than that calculated using the formula

$$a = \frac{D}{2} \cdot \left(1 - \sqrt{1 - \frac{10.F.J.R_e}{3.p_h}}\right)$$

where the value of F is the lesser of $\frac{0{,}65}{(Re/Rg)}$ or 0,77.

R_e/R_g shall not exceed 0,85.

The value of J shall be selected in accordance with annex B.

The minimum wall thickness shall also satisfy the requirements of 5.4.

5.3 Design of convex ends (see Figure 1)

5.3.1 The shape of ends of gas cylinders shall be such that the following conditions are fulfilled:

for torispherical ends (see Figure 1a): $R \leq D$;
$r \geq 0{,}1\ D$;
$h \geq 4b$.

for ellipsoidal ends (see Figure 1b): $H \geq 0{,}192\ D$;
$h \geq 4b$.

5.3.2 The wall thickness of the ends of gas cylinders shall be not less than that calculated using the formula:

$$b = a_1 \times C$$

where

a_1 is the value of a calculated in accordance with 5.2 using J = 1,0;

C is a shape factor, whose value shall be obtained from the graphs given in Figures 2 and 3.

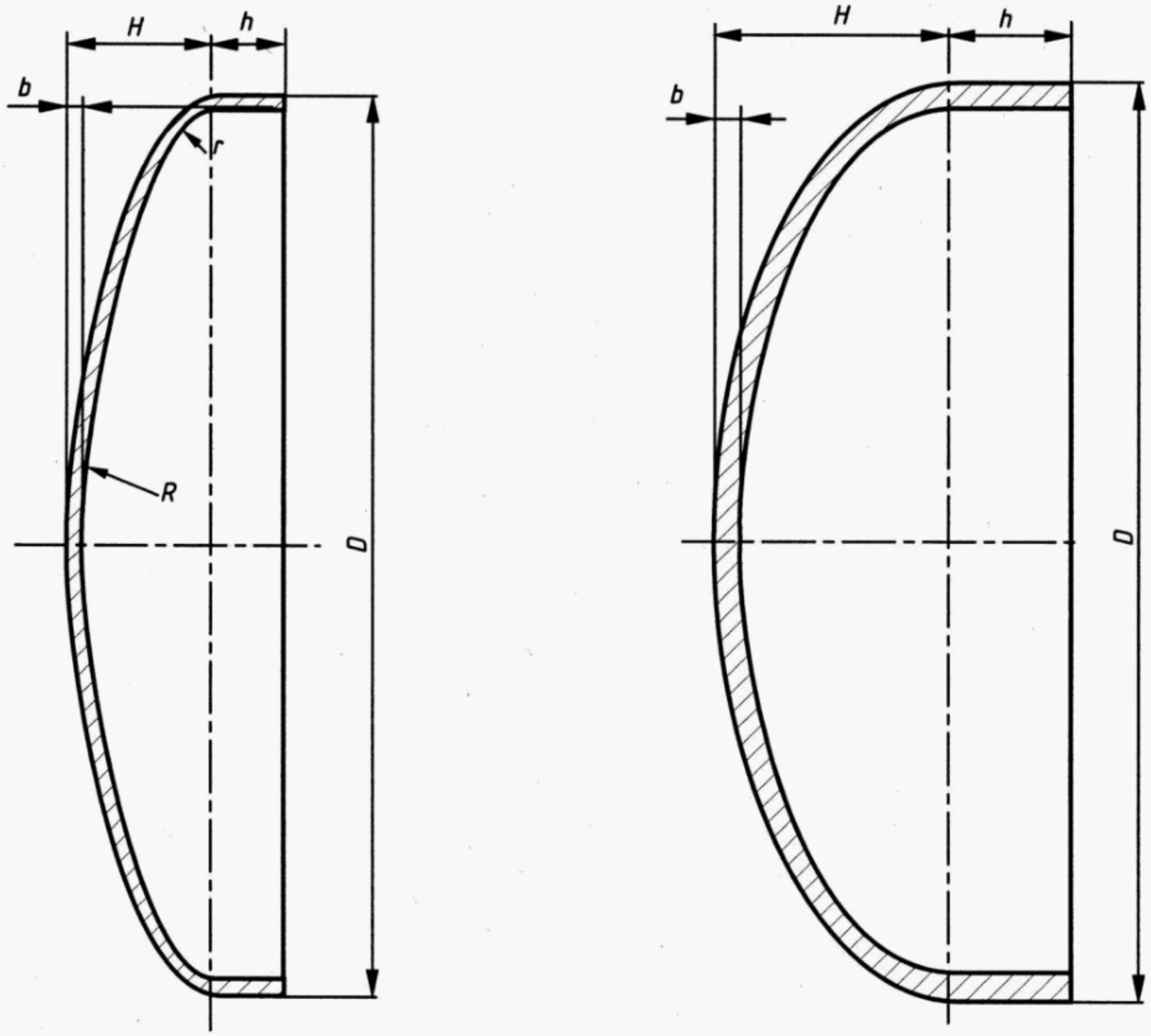

a) Torispherical

b) Ellipsoidal

Figure 1 — Illustration of cylinder ends

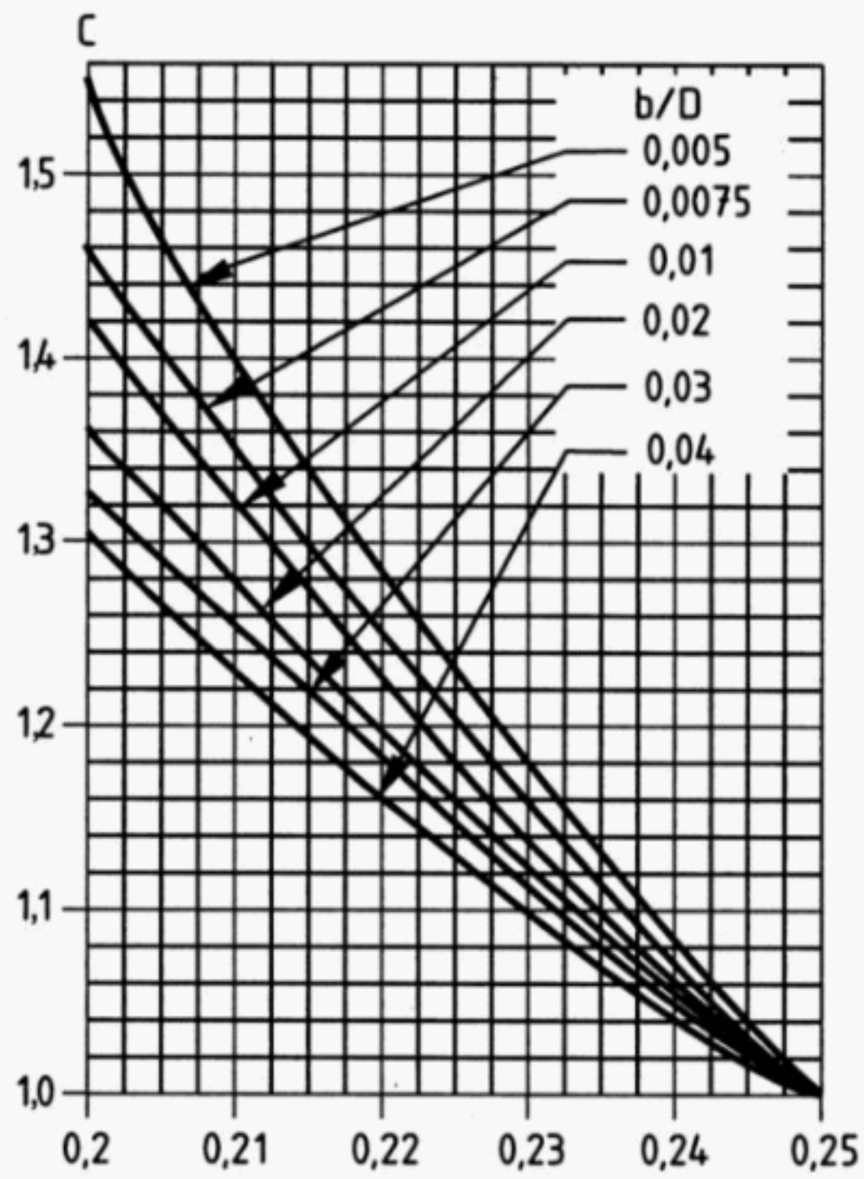

Figure 2 — Values of shape factor C for H/D between 0,2 and 0,25

Figure 3 — Values of shape factor C for H/D between 0,25 and 0,5

5.4 Minimum wall thickness

5.4.1 The minimum wall thickness of the cylindrical shell a and end b shall be not less than the value derived from the appropriate one of the following formulae:

for $D \leq 100$ mm, $a = b = 1{,}1$ mm;

for $100 \text{ mm} < D \leq 150$ mm, $a = b = 1{,}1 + 0{,}008(D - 100)$ mm;

for $D > 150$ mm, $a = b = \frac{D}{250} + 0{,}7$ mm, with an absolute minimum of 1,5 mm.

These formulae apply to cylindrical shells and ends irrespective of whether they are designed by calculation under 5.2 and 5.3 or by the pressure cycling test in 7.3.2.

5.4.2 Apart from the requirements of 5.3, 5.4 and 5.5 any cylindrical part integral with an end shall, except as qualified by 5.4.3, also satisfy the requirements given in 5.2 for the cylindrical shell.

5.4.3 Where the length of the cylindrical portion of the gas cylinder, measured between the beginning of the domed parts of the two ends, is not more than $\sqrt{2bD}$, the wall thickness shall be not less than that of the domed part (see 5.3.2).

NOTE For certain gases, additional corrosion allowance can be applicable.

5.5 Ends of other shapes

Ends of shapes other than those covered by 5.3 may be used provided that the adequacy of their design is demonstrated by a pressure cycling test in accordance with 7.3.2 or by stress analysis.

5.6 Design of openings

5.6.1 The location of all openings shall be restricted to the end(s) of cylinders.

5.6.2 Each opening in the cylinder shall be reinforced, either by a valve boss or pad, of weldable and compatible steel, securely attached by welding and so designed as to be of adequate strength and to result in no harmful stress concentrations. This shall be confirmed by design calculations or a pressure cycling test in accordance with 7.3.2.

5.6.3 The welds of the openings shall be separated from longitudinal and circumferential joints by a distance not less than 3a.

6 Construction and workmanship

6.1 General

The cylinder or cylinder parts shall be produced by:

using seamless or longitudinally welded tube with forged ends being circumferentially welded; or

using longitudinally welded tube with spun ends; or

using a seamless tube, followed by hot forming where the base is sealed with added weld metal; or

using cold worked tube or plates; or

using deep drawn parts; or

using high frequency induction welded tube with welded ends.

6.2 Welding procedures

Each manufacturer, before proceeding with the production of a given design of cylinder, shall qualify all welding procedures to EN 288-1 and EN 288-3 and welders to EN 287-1. Records of such qualification shall be kept on file by the manufacturer.

6.3 Welded joints of pressure containing parts

6.3.1 The welding of longitudinal and circumferential seams shall be by an automatic process. Manual welding is however permitted for boss welds except when they are butt welds.

6.3.2 The longitudinal joint, of which there shall be no more than one, shall be butt-welded.

6.3.3 Circumferential joints, of which there shall be no more than two, excluding end bungs, shall be butt-welded, joggle welded, or butt welded with a backing ring.

6.3.4 For acetylene service, the joints shall be designed in such a way as to eliminate the risk of damaging the porous mass.

6.4 Non-pressure-containing attachments

6.4.1 Parts which are not submitted to pressure such as footrings, handles and neckrings shall be made of steel compatible with that of the cylinder.

6.4.2 Each attachment shall be designed to permit inspection of the attachment welds, shall be clear of longitudinal and circumferential joints, and so designed as to avoid trapping water.

6.4.3 A footring or other support shall be fitted to the cylinder when required to provide stability, and attached so as to permit inspection of the bottom circumferential weld. Permanently attached footrings shall be drained and the space enclosed by the footring shall be ventilated.

6.5 Valve protection

6.5.1 Valves of cylinders of more than 5 l water capacity shall be protected from damage which could cause release of gas, either by the design of the cylinder (e.g. protective shroud) or by a valve protection device (in accordance with EN 962).

6.5.2 When a protective shroud is used, it shall fulfil the requirements of the drop test described in EN 962.

6.5.3 The requirements of 6.5.1 and 6.5.2 may be waived when the cylinders are intended to be conveyed in bundles or cradles, or when some other effective valve protection is provided.

6.6 Neck threads

The internal neck threads shall conform to a recognized standard to permit the use of a corresponding valve thus minimizing neck stresses following the valve torquing operation. Internal neck threads shall be checked using gauges corresponding to the agreed neck thread, or by an alternative method. Particular care shall be taken to ensure that neck threads are accurately cut, are of full form and free from any sharp profiles, e.g. burrs.

NOTE For example, where the neck thread is specified to be in accordance with EN 629-1, the corresponding gauges are specified in EN 629-2.

6.7 Visual examination

6.7.1 Unacceptable defects

Before assembly, the pressure containing parts of the cylinders shall be examined for uniform quality and freedom from unacceptable defects, examples of which are given in annex C.

6.7.2 Welds

6.7.2.1 Before the cylinders are closed, longitudinal welds shall be visually examined from both sides. Permanent backing strips shall not be used with longitudinal welds.

6.7.2.2 All welds shall have a smooth finish without concavity and shall merge into the parent material without under-cutting or abrupt irregularity.

6.7.2.3 Butt welds shall have full penetration. For joggle welds, the penetration shall be full on the straight edge and shall be sufficient on the swaged edge (see Figure 4).

6.7.2.4 Radiographic examination, radioscopic examination, or NDT examination carried out using another suitable method, shall be as specified in annex B.

Dimensions in millimetres

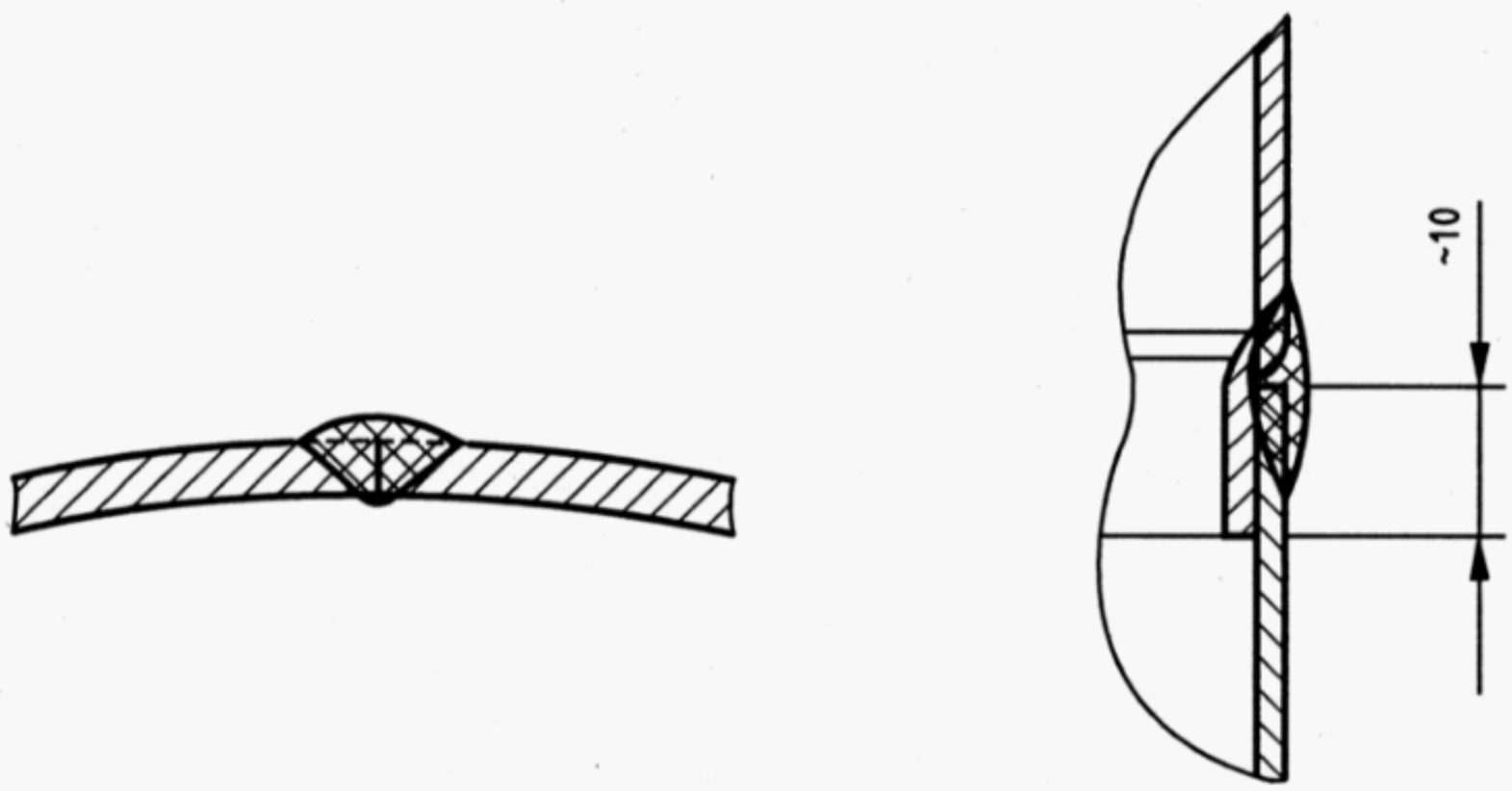

Butt Welds

Joggle welds

Figure 4 — Illustration of welding penetration

6.7.3 Out of roundness

The out-of-roundness of the cylindrical shell shall be limited so that the difference between the maximum and the minimum outside diameter in the same cross-section is not more than 2 % of the mean of these diameters.

6.7.4 Straightness

Unless otherwise specified on the manufacturing drawing, the maximum deviation of the cylindrical part of the shell from a straight line shall not exceed 0,3 % of the cylindrical length.

6.7.5 Verticality

When the cylinder is standing on its base, the cylindrical shell and concentric top opening shall be vertical to within 1 % of the cylindrical length.

6.7.6 Tightness

Tests appropriate to the manufacturing process shall be carried out to ensure that there is no leakage from the cylinder.

7 New design tests

7.1 General requirements

7.1.1 Testing shall be carried out for each new design of cylinder.

A cylinder shall be considered to be of a new design compared with an existing design when:

- it is manufactured in a different factory; or
- it is manufactured by a different welding process or a radical change in an existing process, e.g. change of type of heat treatment; or
- it is manufactured from a steel of different specified chemical composition range; or
- it is given a different heat treatment outside the ranges stipulated in 4.2; or
- if there is a change in base profile, e.g. concave, convex, hemispherical, or there is a change in the base thickness/cylinder diameter ratio; or
- the guaranteed minimum yield stress (R_e) or guaranteed minimum tensile strength (R_g) has changed; or
- the overall length of the cylinder has increased by more than 50 % (cylinders with a length/diameter ratio less than 3 shall not be used as reference cylinders for any new design with this ratio greater than 3); or
- the nominal outside diameter has changed; or
- the guaranteed minimum wall thickness (a') or the guaranteed minimum end thickness (b') has been decreased; or
- the hydraulic test pressure has been changed (where a cylinder is used for a lower pressure duty than that for which the cylinder was approved, it shall not be deemed a new design).

7.1.2 A technical specification of the cylinder, including design drawing, design calculations, material details, welding and manufacturing process and heat treatment, shall be prepared by the manufacturer and attached to the design test certificate (see annex D).

7.1.3 A minimum of 50 finished cylinders, which shall be guaranteed by the manufacturer to be representative of a new design, shall be made available for design testing. If the total production is less than 50 cylinders, enough cylinders shall be made to complete the tests required, in addition to the production quantity. In this case the design test certificate is limited to the particular batch.

7.1.4 The testing process shall include the verifications and tests listed in 7.2.1 and 7.2.2 respectively.

7.2 Verifications and tests

7.2.1 Verifications

It shall be verified that:

the requirements of clause 4 (material) are fulfilled;

the design conforms to the requirements of clause 5;

the requirements of clause 6 and annex B are fulfilled for all cylinders selected;

the internal and external surfaces of the cylinders are free of any defect which may make them unsafe for use (see annex C).

7.2.2 List of tests

The following shall be performed on cylinders selected after the welds of the cylinders have been visually inspected:

the test specified in 7.3.1 (hydraulic burst test) on one cylinder, the cylinder bearing representative stampmarking;

— the test specified in 7.3.2 (pressure cycling test) on one cylinder, the cylinder bearing representative stampmarking.

the tests specified in 8.4 (tensile test), 8.5 (bend test), 8.6 (impact test) where applicable and 8.7 (macroscopic examination of weld cross-sections), on one cylinder, the test pieces being identifiable to the batch;

radiographic examination, radioscopic examination, or NDT examination carried out using another suitable method, as specified in annex B;

7.3 Descriptions of tests

7.3.1 Hydraulic burst test

7.3.1.1 Cylinders subjected to this test shall bear markings in accordance with the complete stamp markings as required for the finished cylinder. The hydraulic burst test shall be carried out with equipment which enables the pressure to be increased at a controlled rate until the cylinder bursts and the change in pressure with time to be recorded.

7.3.1.2 For a test pressure (p_h) ≤ 60 bar the burst pressure (p_b) shall be at least 9/4 times the test pressure with a minimum burst pressure of 50 bar, and for a test pressure > 60 bar the burst pressure shall be at least twice the test pressure.

7.3.1.3 The burst test shall not cause any fragmentation of the cylinder.

7.3.1.4 The main fracture shall not show any brittleness, i.e. the edges of the fracture shall not be radial but shall be at an angle to a diametral plane and display a reduction of area throughout their thickness. The fracture shall be examined and shall be free of defects.

7.3.1.5 Additionally for cylinders with a test pressure (p_h) ≤ 60 bar, the ratio of the volumetric expansion of the cylinder to its initial volume shall be at least:

20 % if the length of the cylinder is greater than the diameter; or

17 % if the length of the cylinder is equal to or less than the diameter.

7.3.2 Pressure cycling test

7.3.2.1 The pressure cycling test shall be carried out on one cylinder bearing the required stamp markings. See clause 12 for particular requirements concerning stamp markings on the dome ends.

7.3.2.2 This test shall be carried out with a non-corrosive liquid, subjecting the cylinder to successive reversals at an upper cyclic pressure which is equal to the hydraulic test pressure (p_h). The value of the lower cyclic pressure shall not exceed 10 % of the upper cyclic pressure. The frequency of reversals of pressure shall not exceed 0,25 Hz (15 cycles/minute). The temperature measured on the outside surface of the cylinder shall not exceed 50 °C during the test.

7.3.2.3 The cylinder shall be subjected to 12 000 cycles without leakage or failure.

7.3.2.4 For cylinders manufactured according to annex A or manufactured from tubes with spun ends, after the test the cylinder bases shall be sectioned in order to measure the thickness and to ensure that this thickness is no more than 15 % above the minimum base thickness prescribed in the design. The actual wall and base thickness shall be measured and recorded on the design test certificate.

7.4 Design testing certificate

If the results of the checks are satisfactory, a design test certificate shall be issued, a typical example of which is given in annex D.

8 Batch tests

8.1 General

For the purpose of carrying out the batch testing, a random sample of cylinders as indicated in Table 1 shall be taken from each batch, as defined in 3.1.4. A batch shall consist of a maximum of 3 000 cylinders. All batch tests shall be carried out on finished cylinders.

Table 1 — Batch sampling

Batch size	Number of cylinders taken as samples	Number of cylinders to be tested			
		Tensile test and bend test (as per 8.4 and 8.5)	Impact test[1] (as per 8.6)	Macroscopic examination (as per 8.7)	Burst tests (as per 7.3.1)
Up to 200	2	1	1	1	1
201 to 500	3	1	1	1	2
501 to 1 500	9	2	1	1	7
1 501 to 3 000	18	3	1	1	15

[1] If required, as defined in 7.3

8.2 Information

For the purpose of batch testing, the manufacturer shall provide the following:

the design test certificate;

the certificates for the material of construction as required in 4.1.6 stating the cast analyses of the steel supplied for the construction of the cylinders;

a list of cylinders, stating serial numbers and stamp markings as required;

a statement of the thread checking method used and the results thereof.

8.3 Checks and verifications

The following checks and verifications shall be carried out on each batch of cylinders:

ascertain that a design test certificate has been obtained and that the cylinders conform to it;

check whether the requirements set out in clauses 4, 5, 6 and 12 have been met, and in particular check by an external and internal examination of the cylinders whether the construction and checks carried out by the manufacturer in accordance with clause 6 are satisfactory. The visual examination shall cover at least 10 % of the cylinders submitted. However, if an unacceptable defect is found (as described in annex C) 100 % of cylinders shall be visually inspected;

carry out or witness the tests specified in 8.4 (tensile test), 8.5 (bend test), 8.6 (impact test) where applicable, 8.7 (macroscopic examination of weld cross-sections) and 7.3.1 (hydraulic burst test) on the number of cylinders specified in 8.1;

check whether the information supplied by the manufacturer listed in 8.2 is correct; random checks shall be carried out;

assess the results of the NDT examination, as specified in annex B.

8.4 Tensile test

8.4.1 General

The tensile test on parent metal shall be carried out on a test sample taken from the finished cylinder in accordance with the requirements of EN 10002-1. The two faces of the test sample formed by the inside and the outside surfaces of the cylinder shall not be machined. The tensile test on welds shall be carried out in accordance with 8.4.3.

8.4.2 Tensile test samples required from parent material

8.4.2.1 For two-part cylinders, either one tensile test sample shall be cut in the longitudinal direction from the cylindrical portion of one end of the cylinder, or, if there is not sufficient cylindrical length available to permit cutting the cylindrical portion, then one tensile test sample shall be taken from one end (see Figure 6).

8.4.2.2 For three-part cylinders, one tensile test sample in the longitudinal direction from the shell section 180° away from the weld and one tensile test sample from either of the ends shall be taken. If the two ends are of different grades or from a different supplier of material, a tensile test sample shall be taken from each end (see Figure 5).

8.4.2.3 The values obtained for yield stress (R_{ea}), tensile strength (R_m) and elongation (A) shall be not less than those guaranteed by the cylinder manufacturer and in accordance with those given in EN 10120, or EN 10028-1 and EN 10028-3, or EN 10028-1 and EN 10028-5, as appropriate.

8.4.3 Tensile test samples required from welds

8.4.3.1 For two-part cylinders, one tensile test sample shall be taken (see Figure 5).

8.4.3.2 For three-part cylinders, one tensile test sample on the longitudinal weld shall be taken. If the circumferential welds are made by a different procedure, then the same test shall also be made on this weld (see Figure 6).

8.4.3.3 The tensile test transverse to the weld shall be carried out on a test sample having a reduced section 25 mm wide over a length extending to 15 mm beyond each edge of the weld. Outside this central part, the width of the test sample shall increase progressively (see Figure 7).

8.4.3.4 All tensile tests shall be in a direction transverse to the weld. The face and root of the weld in the test sample shall be machined flush to the plate surface.

The face and back of the parent metal shall not be machined but shall represent the surface of the cylinder as manufactured. The ends only may be flattened, by cold pressing, for gripping in the test machine. The tensile strength value obtained shall be at least equal to the minimum value specified in 8.4.2.3 for the parent metal, regardless of the position of the fracture.

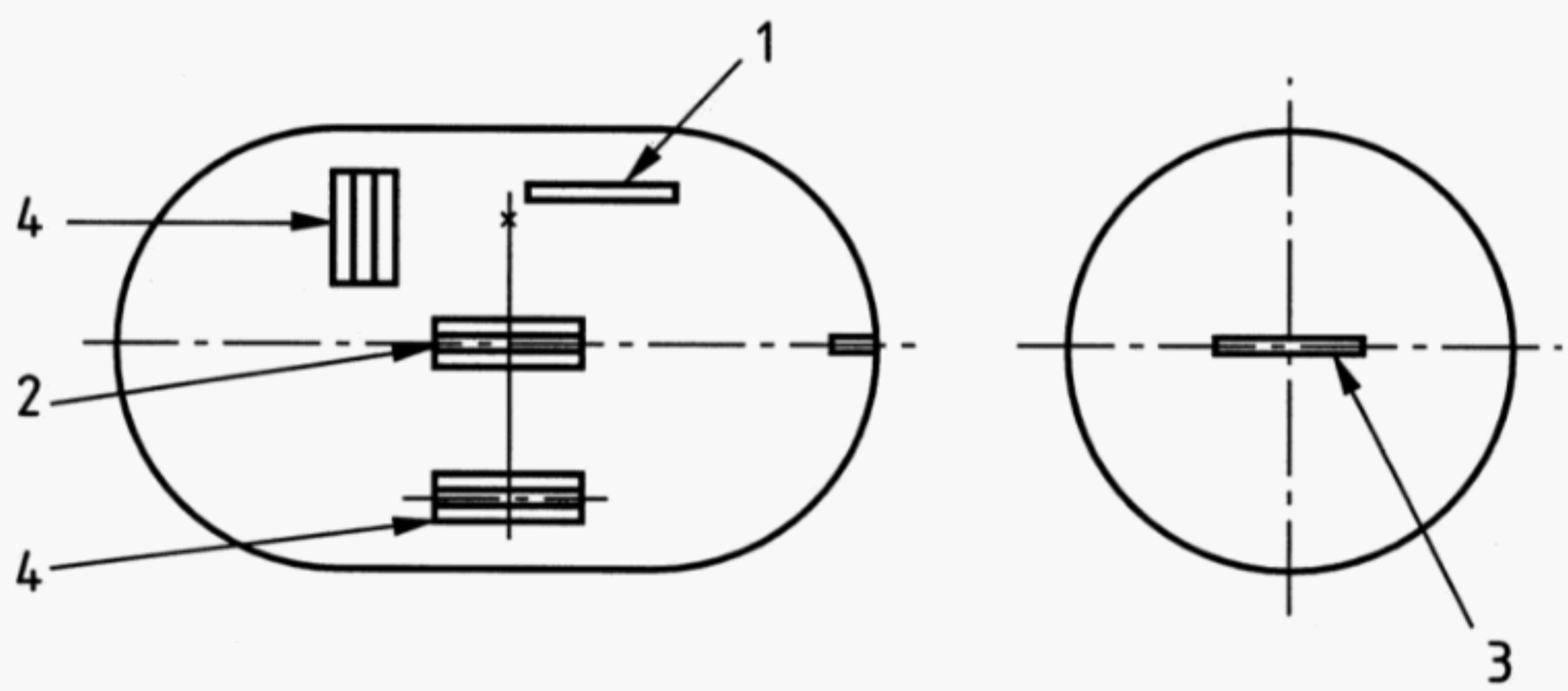

Key

1 1 tensile test piece
2 1 tensile test piece, 1 root bend test piece, 1 face bend test piece
3 1 tensile test piece
Required only if insufficient cylindrical length available
4 Impact test

Figure 5 — Test pieces from two-part cylinders

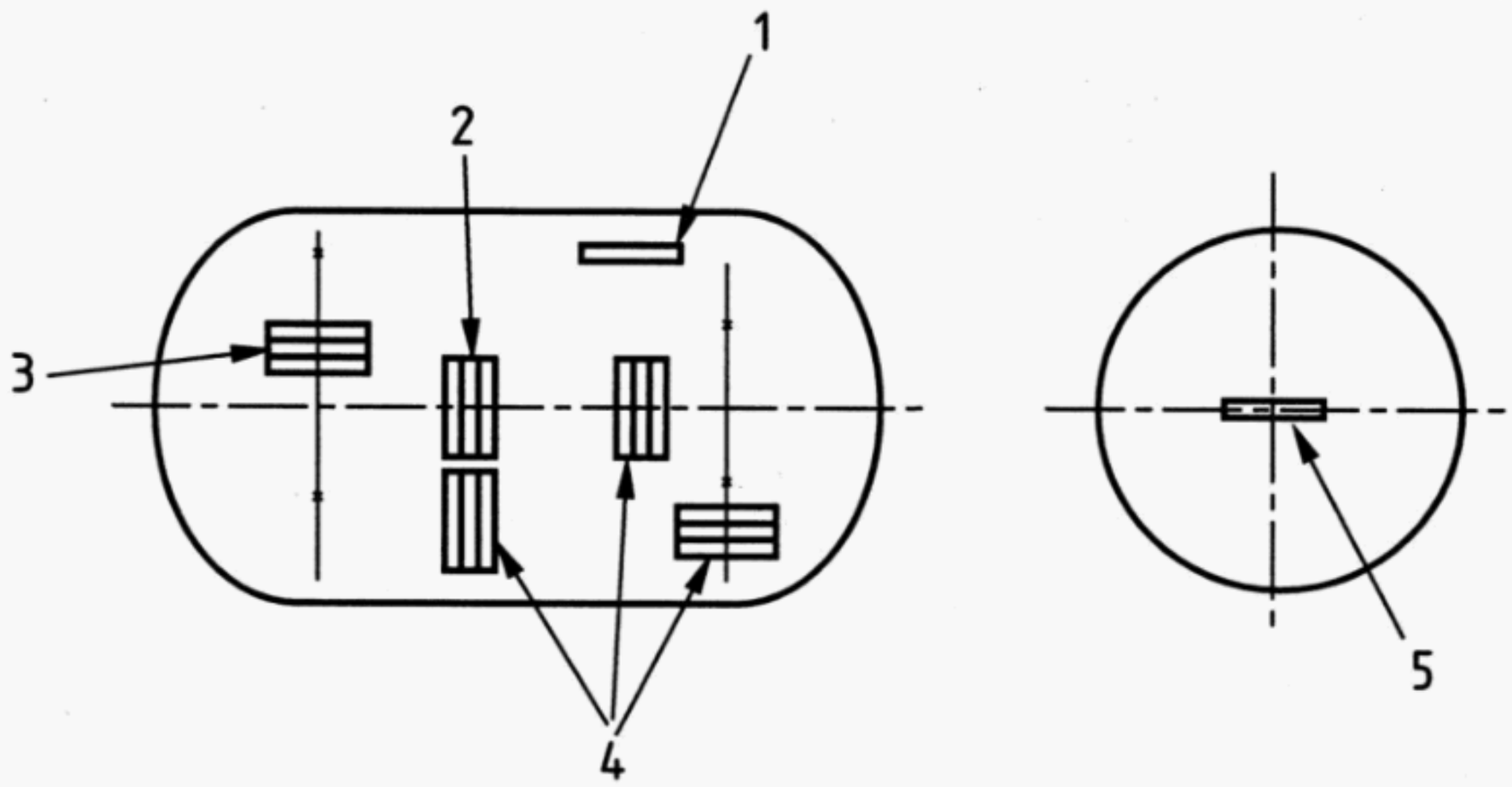

Key

1 1 tensile test piece
2 1 tensile test piece
1 root bend test piece
1 face bend test piece
3 1 tensile test piece
1 root bend test piece
1 face bend test piece
Required only if welded by a different process from longitudinal weld (see 8.4.3.2 and 8.5.5)
4 Impact test piece
5 1 tensile test piece

Figure 6 — Test pieces from three-part cylinders

Dimensions in millimetres

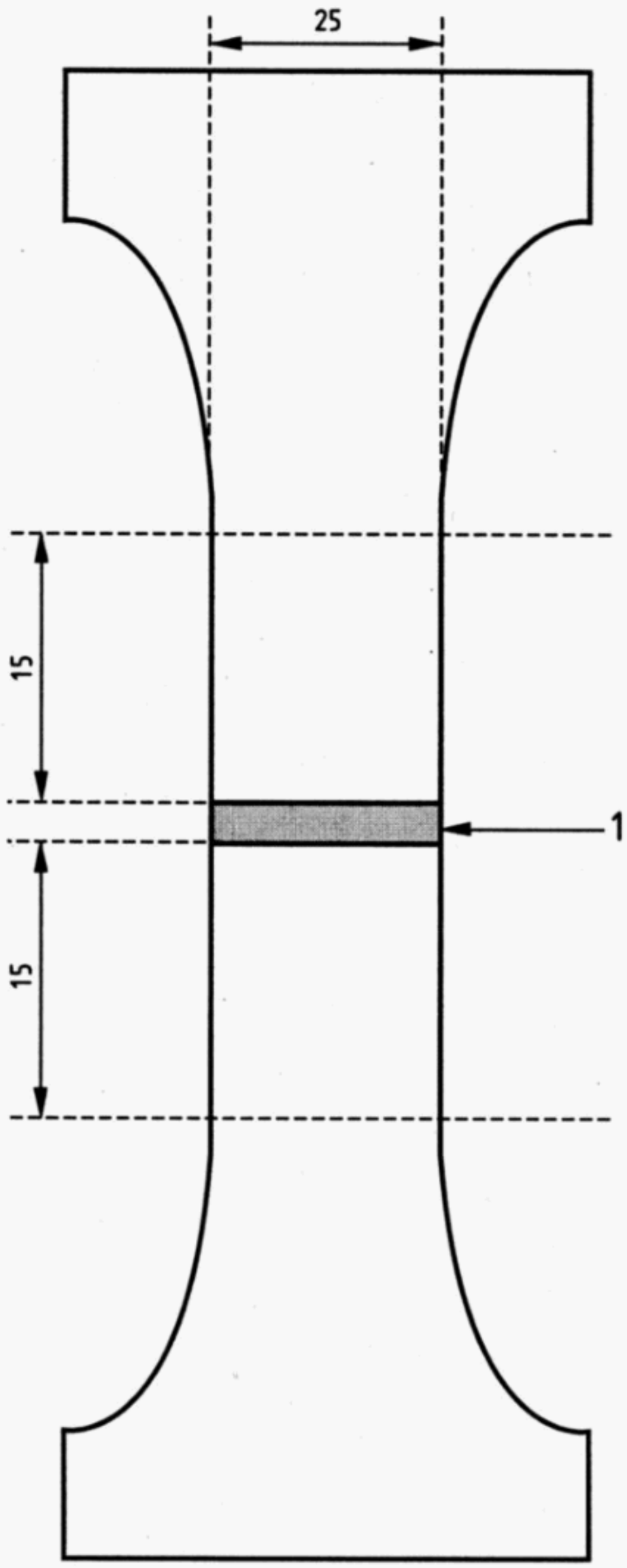

Key

1 Weld

Figure 7 — Dimensions of test samples

8.5 Bend test

8.5.1 The specimens for the bend test shall be taken in accordance with Figure 5 or Figure 6 with dimensions as shown in Figures 8.

8.5.2 The test piece shall not crack when bent inwards around a former until the inside edges are not further apart than the diameter of the former (see Figure 11).

8.5.3 The ratio n between the diameter (D_f) of the former and the thickness (t) of the test sample shall be as shown in Table 2.

Table 2 — Bend test requirements

Actual tensile strength R_m in MPa	Value of n
$R_m \leq 440$	2
$440 < R_m \leq 520$	3
$R_m > 520$	4

8.5.4 For two part cylinders, bend test samples shall be taken from the root weld and one face weld, on the circumferential weld (see Figure 5).

8.5.5 For three part cylinders, one root weld and one face weld shall be taken from the longitudinal weld. If the circumferential weld is welded by a different procedure, then the same bend tests shall also be carried out on this weld (see Figure 6).

Dimensions in millimetres

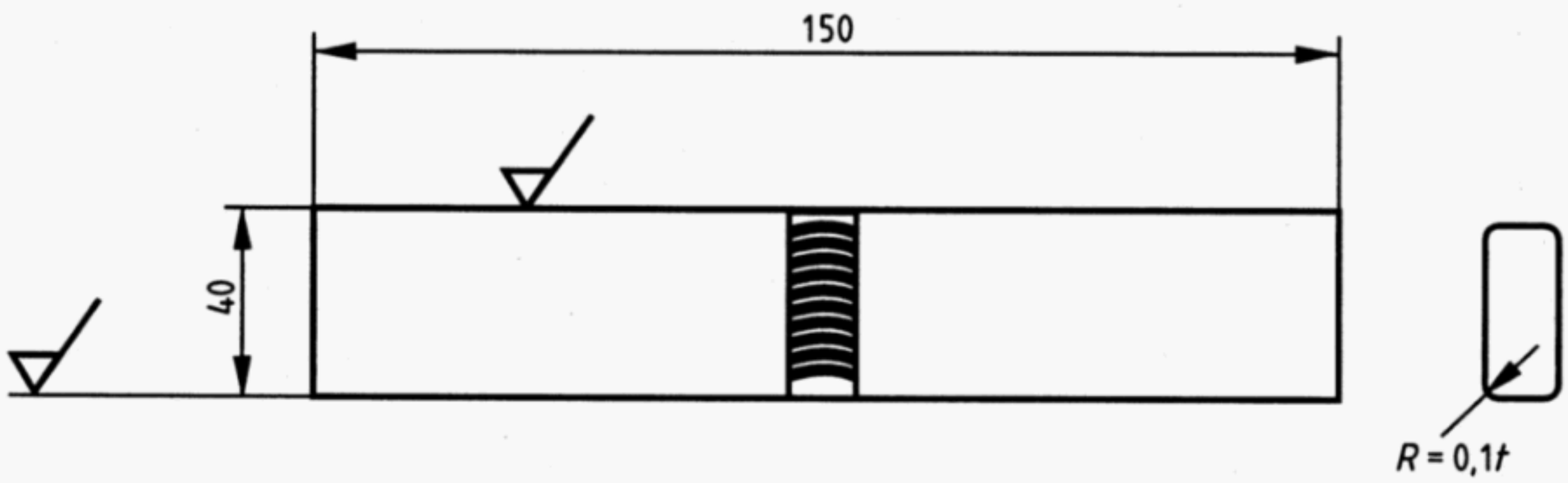

Figure 8 — Transverse guided bend test — Specimen preparation details

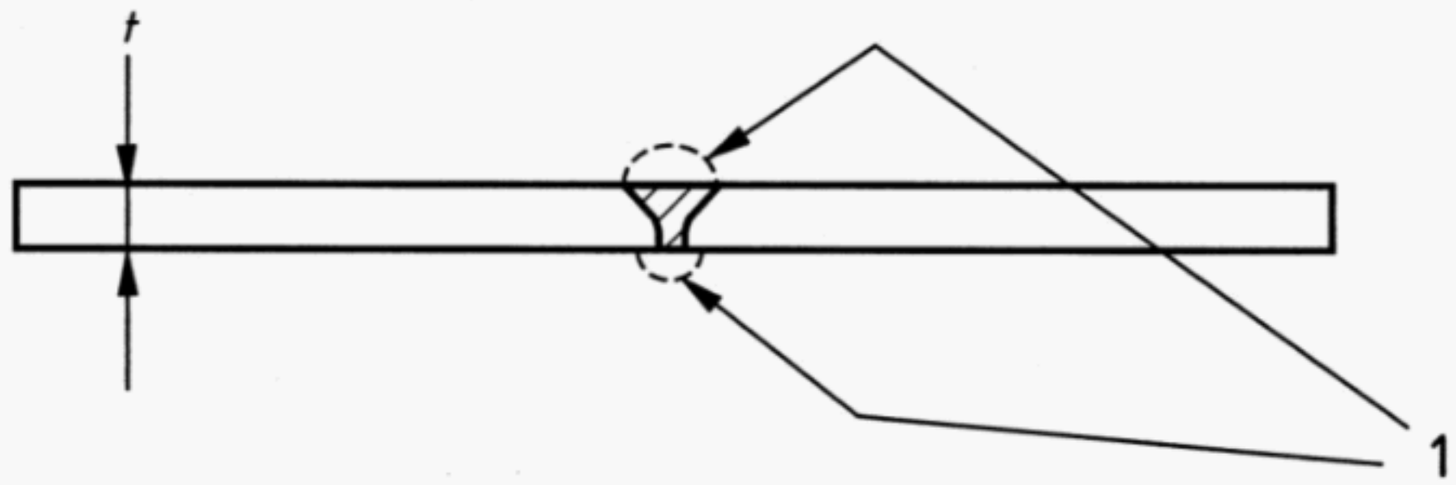

Key

1 Weld dressed flush

Figure 9 — Transverse guided bend test — Butt weld specimen

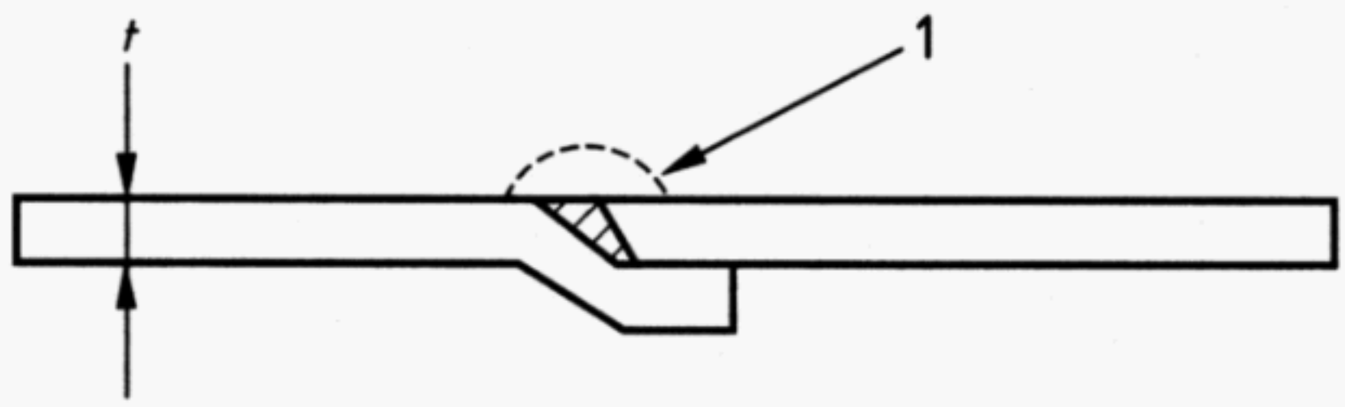

Key

1 Weld dressed flush

Figure 10 — Transverse guided bend test — Joggle joint weld specimen

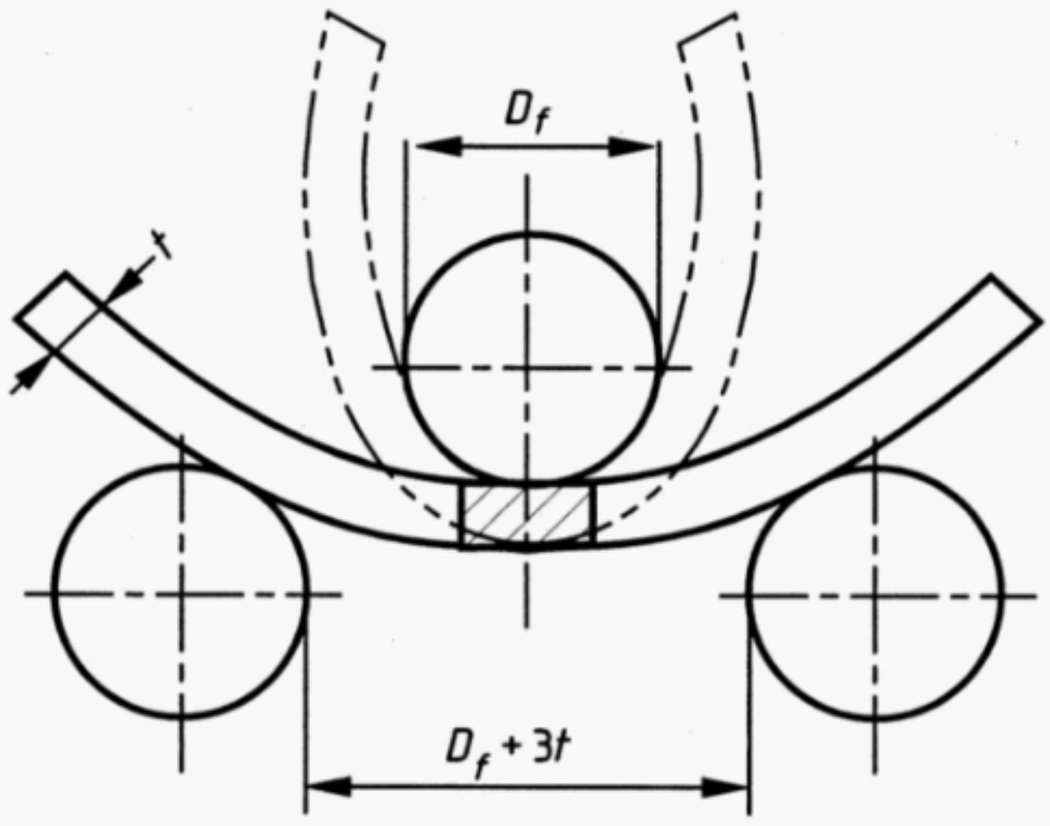

Figure 11 — Illustration of bend test

8.6 Impact test

8.6.1 The impact test is not required for cylinders where the test pressure is less than or equal to 60 bar and also the wall thickness is less than 5 mm.

8.6.2 Except for the requirements set out below, the impact test shall be carried out in accordance with EN 10045-1.

8.6.3 The test temperature shall be at least that specified in EN 13445-2, with a minimum design reference temperature of – 50 °C. For deciding the test temperature, the actual cylinder wall thickness shall be used.

8.6.4 The following impact test samples shall be taken (see Figure 5 or 6 as appropriate):

three impact test samples from each parent material;

three impact tests samples from the longitudinal welds;

three impact tests samples from one of the circumferential welds.

8.6.5 For the parent material samples, the transverse impact test pieces shall be taken from the wall of the cylinder. The notch shall be perpendicular to the face of the wall. The test pieces shall be machined on four faces only, with the inner and outer face of the cylinder wall shall be unmachined. For outside diameters equal or less than 140 mm, longitudinal impact tests may be performed instead of transverse tests.

8.6.6 For the welds, impact test pieces transverse to the weld shall be taken, except that with cylinders having outside diameters mm, longitudinal test pieces may be taken. The notch shall be in the centre of the weld and shall be perpendicular to the face of the cylinder. The test pieces shall be machined on all six faces. If the wall thickness does not permit a final test piece width of 10 mm, the width shall be as near as practicable to the nominal thickness of the cylinder wall.

8.6.7 The average of three specimens shall meet the value specified in Table 3. No specimen shall show a value less than 70 % of the average value.

Table 3 — Minimum value for impact test pieces

Tensile strength R_g	≤ 750 MPa		> 750 MPa	
Material	Parent	Weld	Parent	Weld
Impact energy, (J/cm[2]) for d > 140 mm. Transverse test	20	20	35	35
Impact energy (J/cm[2]) for d ≤ 140 mm. Longitudinal test	16	16	28	28

8.7 Macroscopic examination of weld cross-sections

A macroscopic weld examination for each type of welding procedure shall be performed. It shall show complete fusion and shall be free of any assembly faults or unacceptable defects, as defined in B.3.3.

9 Tests on every cylinder

9.1 Pressure test

All cylinders in each batch shall be subjected to a pressure test. When carrying out a pressure test a suitable fluid, normally water shall be used as the test medium. The pressure in the cylinder shall be increased at a controlled rate until the pressure (p_h) is reached. The cylinder shall remain under pressure p_h for at least 30 s to establish that the pressure does not fall and that there are no leaks.

NOTE A pneumatic pressure test can be substituted, provided that appropriate measures are taken to ensure safe operation and to contain any energy that can be released, which is considerably more than that in the hydraulic test.

9.2 Leakage test

Where the manufacturing process requires a leakage test in accordance with 6.7.6, all cylinders shall be subjected to this test.

10 Failure to meet test requirements

10.1 In the event of failure to meet test requirements, retesting or reheat treatment and retesting shall be carried out as follows:

a) if there is evidence of a fault in carrying out a test, or an error of measurement a further test shall be performed. If the result of this test is satisfactory, the first test shall be ignored;

b) if the test has been carried out in a satisfactory manner, the cause of test failure shall be identified:

if the failure is considered to be due to the heat treatment applied, the manufacturer may subject all the cylinders of the batch to a further heat treatment,

if the failure is not due to the heat treatment applied, all the identified defective cylinders shall be rejected or repaired. The repaired cylinders are then considered as a new batch.

NOTE The cylinders from the repaired batch and the remaining cylinders from the original batch are considered as two separate batches.

In both cases the new batch shall be inspected and tested. Only the relevant tests needed to prove the acceptability of the new batch shall be performed again and prove satisfactory. If one or more tests prove even partially unsatisfactory, all the cylinders of the batch shall be rejected.

10.2 The conditions for the reheat treatment shall be the same as for the first heat treatment (e.g. normalized cylinders shall be re-normalized).

11 Records

If the results of the checks are satisfactory, the cylinders shall be stamped in accordance with EN 1089-1, or in the case of cylinders to be used for LPG service, the stamping shall be in accordance with EN 1442. A batch test certificate, a typical example of which is given in D.2 shall be issued. If the results of the tests are not satisfactory, proceed as described in clause 10.

12 Marking

Each cylinder shall be permanently and legibly marked on a name-plate or other appropriate permanently attached non-pressure part, unless marked as stated below.

Where cylinders are directly marked on the dome ends, it shall be demonstrated by the burst and pressure cycling tests that the failure does not initiate at the markings. See 7.3.1 and 7.3.2.

Each cylinder shall be marked in accordance with EN 1089-1, or, in the case of cylinders to be used in LPG service, in accordance with EN 1442.

Annex A
(normative)

Cylinders made from longitudinal seam high frequency induction (HFI) welded tube by spinning of the end

A.1 Design and construction of the cylinder

Except as specified in the following clauses A.2 to A.4, the cylinder shall conform to EN 1964-1. The maximum test pressure (p_h) shall be 60 bar.

A.2 Manufacturing process

The longitudinal welded HFI tube shall be manufactured and tested in accordance with EN 10208-2.

The internal and the external flash of the longitudinal welded HFI tube shall be removed. The longitudinal seam shall be inspected 100 % by ultrasonics for detection of longitudinal and transverse defects. The stress reduction factor for the weld shall be J = 1,0.

The ends of the tube shall be formed by the spinning process. All finished cylinders shall be ultrasonically examined in accordance with annex C of EN 1964-1:1999.

A.3 Heat treatment

It is not necessary to heat treat the cylinders, provided that the following requirements are fulfilled:

the cylinder has been made from normalized P355NB strip conforming to EN 10120 and the weld area of the HFI tube has been subjected to on-line induction normalizing treatment;

the forming operation of the cylinder ends by the spinning method has been carried out in a controlled temperature range with specified parameters;

the properties and microstructure of the finished cylinder correspond to those of a normalized cylinder;

the entire cross section of the tube has a fine-grained microstructure.

A.4 Design tests and batch tests

A.4.1 Design tests

In addition to the prototype test requirements of EN 1964-1 the following requirements shall be fulfilled:

the stages (preheating duration and temperature, forming temperature range, forming duration, forming process parameters) of the cylinder end shaping shall be determined and shall be recorded on the design test certificate;

the room temperature tensile properties of the formed cylinder ends shall be equivalent to those of the base material in the cylindrical section;

the microstructure of the formed cylindrical ends shall be equivalent to that of the normalized base material in the cylindrical section;

the base material shall conform to the requirements of EN 10120 for tensile properties and microstructure.

A.4.2 Batch tests

In addition to the production test requirements of EN 1964-1, the following requirements shall be fulfilled:

— the impact tests shall be carried out in accordance with 8.6 of this standard;

— for every 3 000 cylinders a microsection of one of the temperature controlled shaped ends shall be assessed to ensure that the microstructure is equivalent to that of the normalized base material.

Annex B
(normative)

Radiographic examination of welds

B.1 General

The radiographic examination shall conform to the techniques in EN 1435. Radiographs shall show complete penetration of weld and freedom from unacceptable defects (as specified in annex D). The test equipment shall be operated by personnel certified at least to level 1 of EN 473 and supervised by personnel certified at least to level 2.

The radiographic examination may be replaced by a radioscopy or another suitable method if the applied NDT method is carried out according to a process, that provides the same quality of examination as radiographic examination.

B.2 Requirements

B.2.1 Radiographic examinations shall be carried out as listed in Table B.1.

Table B.1 — Requirements for radiographic examination

Type of weld	Stress reduction factor, J	Control frequency	Zone of inspection
2 piece cylinders with joggle joint	J = 1	1 cylinder at the beginning and 1 cylinder at the end of each shift period and for each machine (see Note 1)	10 % of the length of the circumferential weld, which shall include the overlapping zone
2 piece cylinders with butt weld	J = 1	10 % of cylinders	10 % of the length of the circumferential weld, which shall include the overlapping zone
3 piece cylinders with joggle joints	J = 1 circumferential	10 % of cylinders	10 % of the length of the circumferential weld, which shall include the overlapping zone and the intersection, and 10 % of the length of the longitudinal weld
	J = 0,9 longitudinal	1 cylinder at the beginning and 1 cylinder at the end of each shift period and for each machine (see Note 1)	

Table B.1 — Requirements for radiographic examination (continued)

Type of weld	Stress reduction factor, J	Control frequency	Zone of inspection
3 piece cylinders with butt joints	J = 1 circumferential	100 % of cylinders	10 % of the length of the circumferential weld, which shall include the overlapping zone and the intersection, and 10 % of the length of the longitudinal weld
	J = 0,9 longitudinal		
Bung butt weld	J = 1	1 cylinder at the beginning and 1 cylinder at the end of each shift period and for each machine (see Note 1)	100 %
NOTE In the case of continuous production, this may be limited to 1 per shift. A new examination should be made in the case of adjustment of any of the welding machines or machine parameters.			

B.2.2 Welded joints shall be radiographed for a distance of 50 mm (25 mm on each side) beyond the intersection of each joint (see Figure B.1).

B.2.3 If the radiographs show no unacceptable defects and the batch tests are completed satisfactorily, the cylinders shall be acceptable.

Dimensions in millimetres

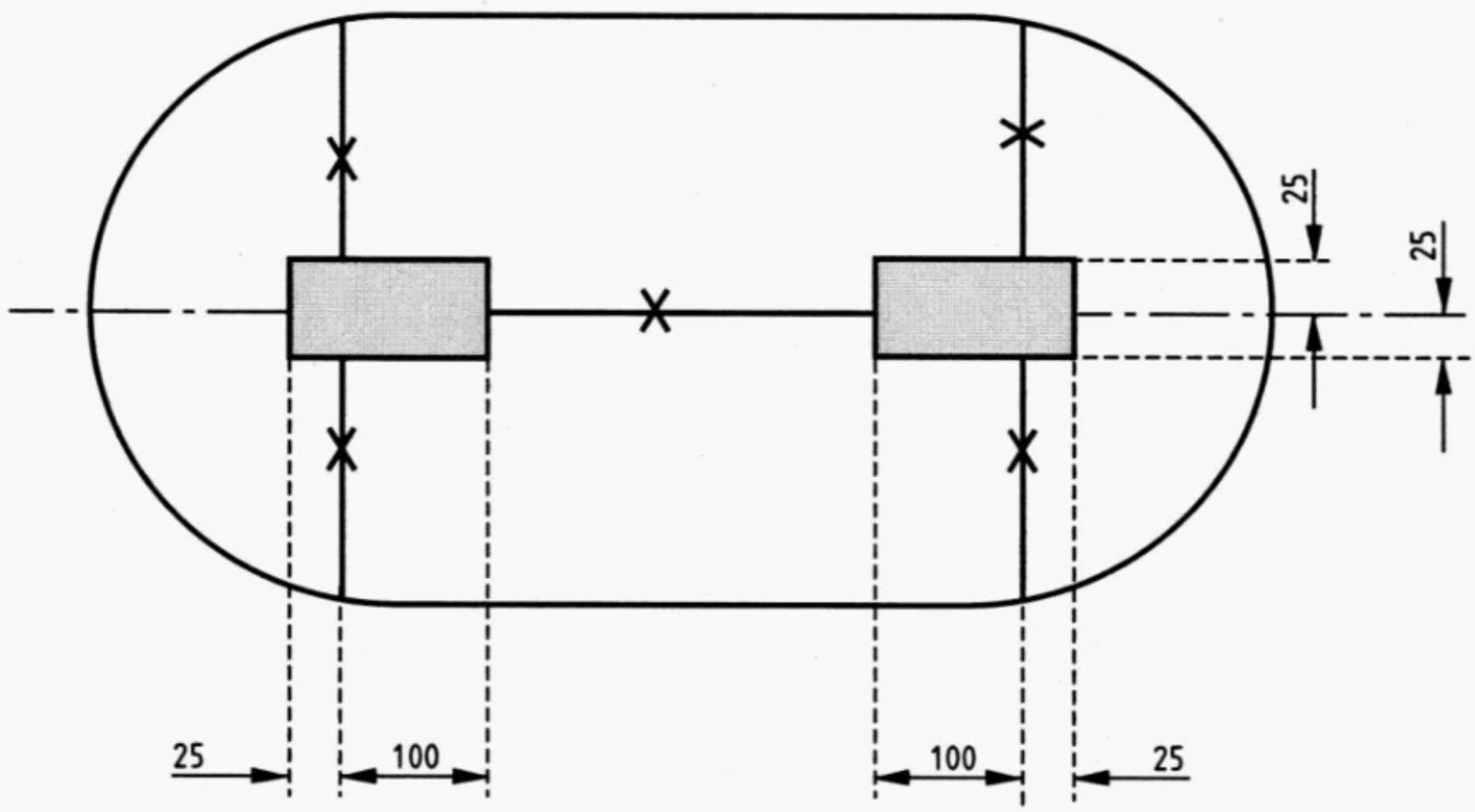

Figure B.1 — Extent of spot-radiography at weld intersections

B.3 Detection of defects

B.3.1 When defects are detected, the manufacturer shall retest the entire length of the relevant weld for each cylinder manufactured since the last radiographic examination where no defect was found. If an approved identification system is in operation, the number of cylinders to be retested may be limited to those manufactured on the identified welding equipment.

B.3.2 Assessment of the weld radiographs shall be based on the original films in accordance with the practice recommended in clause 6 of ISO 2504:1973.

B.3.3 Acceptance criteria shall be as specified to level C in EN 25817 or level 2 in EN 12517.

Annex C
(normative)

Description, evaluation of manufacturing defects and conditions for rejection of welded steel gas cylinders at time of visual inspection

C.1 Introduction

Several types of defects can occur during the manufacturing of a welded steel gas cylinder. Such defects may be mechanical or material. They can be due to the basic material used, the manufacturing process, heat treatments, marking operations and other occurrences during manufacture.

The aim of this annex is to identify the manufacturing defects most commonly met and to provide rejection criteria to the inspectors who shall perform the visual inspection. Nevertheless extensive field experience and good judgement are necessary by the inspector to detect and to be able to evaluate and judge a defect at the time of the visual inspection (see EN 25817).

C.2 General

C.2.1 Visual examination shall be carried out in accordance with EN 970. It is essential to perform the visual internal and external inspection in good conditions. Appropriate sources of illumination with sufficient intensity shall be used e.g. 50 lux.

The surface of the metal and particularly of the inner wall shall be clean, dry and free from oxidation products, corrosion and scale since these could obscure more serious defects. Where necessary, the surface shall be cleaned under closely controlled conditions by suitable methods before further inspection.

When this visual inspection is carried out after the circumferential welding, the internal neck area shall be examined by means of an introscope, dental mirror or other suitable appliance.

C.2.2 Defects may be repaired in accordance with Table C.1. It shall be ensured that any repair method used will not impair the safety of the cylinders. Great care shall be taken to avoid introducing new defects. After such repair the cylinders shall be re-examined, and, if necessary, the wall thickness shall be rechecked.

C.3 Manufacturing defects

The most commonly found manufacturing defects and their definitions are listed in Table C.1. Rejection limits for repair or reject are included in this table. These rejection limits have been established following considerable field experience. They apply to all sizes and types of cylinders and service conditions. Nevertheless some customer specifications, some types of cylinders or some special service conditions may require more stringent criteria. Rejection limits for repair or reject of weld defects shall be in accordance with EN 25817 level C.

C.4 Rejected cylinders

All rejected cylinders shall be rendered unserviceable.

Table C.1 — Manufacturing defects in welded steel gas cylinders and rejection criteria

Defect	Description	Conditions and/or actions	Repair or scrap
Bulge	Visible swelling of the cylinder	All cylinders with such a defect	Scrap
Dent	A depression in the cylinder that has neither penetrated nor removed metal (see Figure C.1) and is greater in depth than 1 % of the outside diameter of the cylinder	- When the depth of the dent exceeds 3 % of the external diameter of the cylinder - When the diameter of the dent is less than 15 times its depth	Repair if possible followed by heat treatment of the cylinder, or scrap Repair if possible followed by heat treatment of the cylinder, or scrap
Cut or gouge	A sharp impression where metal has been removed or redistributed and whose depth exceeds 5 % of the cylinder wall thickness	When the depth of the cut or gouge exceeds 10 % of the wall thickness or when the length exceeds 25 % of the outside diameter of the cylinder.	Repair if possible by grinding (see Note 1), or scrap.
Lamination	Layering of the material within the cylinder wall and sometimes appearing as a discontinuity or crack (see Figure C.2)	- Inside defect: all cylinders with such defect - Outside defect: all cylinders with such defect	Repair if possible by grinding (see Note 1), or scrap Repair if possible. by grinding (see Note 1), or scrap
Crack	A split or rift in the metal	- All cylinders with such defects	Scrap
Internal neck threads damaged	Neck threads damaged, with dents, cuts, burrs or out of tolerance	- When the design permits it, threads may be re-tapped and re-checked by the appropriate thread gauge and carefully visually re-examined. The appropriate number of effective threads shall be achieved. - If not repairable	Repair Scrap
Non secure neck ring not subjected to pressure	Neck ring turns under application of low torque or pulls off under low axial load (see Note 2)	All cylinders presenting such a defect	Repair if possible or scrap

Table C.1 — Manufacturing defects in welded steel gas cylinders and rejection criteria (continued)

Defect	Description	Conditions and/or actions	Repair or scrap
Non conformity with design drawing	Non-conformity with design drawing (e.g. neck or bottom form and dimensions, out of straightness, stability, lack of thickness)	All cylinders presenting such a defect	Repair if possible or scrap
Illegible, modified or incorrect stamping	Marking by means of a metal punch	All cylinders presenting such a defect	Repair if possible or scrap
NOTE 1 After any repair by grinding, it should be checked that the remaining wall thickness is above the guaranteed minimum wall thickness. NOTE 2 The manufacturer should ensure that the axial load required to remove the neck-ring is greater than 10 times the weight of the empty cylinder and not less than 1 000 N, also that the minimum torque required to turn the neck-ring is greater than 100 Nm.			

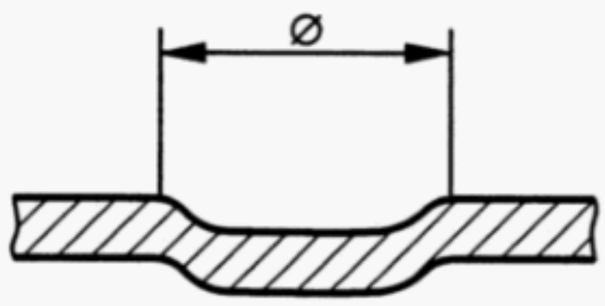

Figure C.1 — Dent

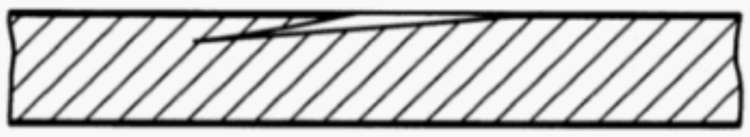

Figure C.2 — Lamination

Annex D
(informative)

Examples of design and batch test certificates

D.1 Design test certificate

Issued by ..... on the basis of

.....

applying EN 13322-1.....

.....concerning WELDED CARBON STEEL GAS CYLINDERS

Certificate No. ..... Date .....

Type of cylinder .....(Description of the family of cylinders to which the certificate applies e.g. cylinder drawing number)

p_h ..... D_{min} ..... D_{max} ..... a' ..... b' .....

L_{min} ..... L_{max} ..... V_{min} ..... V_{max} .....

Manufacturer or agent ..... (Name and address of manufacturer or its agent).....

.....

.....

.....

.....

Details of the results of the design testing of the cylinder and the main features of the type are annexed.

All information may be obtained from ..... (Name and address of the certificate issuer)....

.....

.....

Date ..... Place .....

Signature .....

D.2 Information to be attached to the design test certificate

The documentation required in 7.1.2 should be attached to the design test certificate

D.3 Batch test certificate

Application of CEN Standard .....

Issuer .....

.....

Date .....

Design certificate No .....

Description of vessels (drawing number).....

.....

CEN production testing No .....

Manufacturing batch No ..... to .....

Manufacturer .....

(Name and address)

.....

.....

Country ..... Mark .....

Owner .....

(Name and address)

.....

.....

Customer .....

(Name and address)

Date ..... Place .....

Signature .....

Table D.1 — Batch – Measurements of sample cylinders

Test No	Batch consisting of No. ..... to No.	Water capacity (litres)	Mass empty (kg)	Minimum measured thickness	
				of the shell (mm)	of the domed end (mm)

Table D.2 — Batch tests – Non-destructive test results

REPORT OF RADIOGRAPHIC EXAMINATIONS OF WELDS

Customer: _____ Type: _____ Batch N° _____

Parameters									Position source/Film
Radiographic source: _____									
Amperage : mA	Voltage : kV	Material thickness mm							
Exposure time : _____ Sec.	Dist. Source/Film _____ mm	I.Q.I _____							
Type of film:		Density:							
Data						Interpre-tation	Results	Comments	
Day/ month	Machine n°	Cylinder n°	Welder n°	Type of joint	Radio-graph. N°				
									Notation convention W
									A - Void
									Aa- Spheroid
									Ab - Wormhole

								Ad – Surface
								B - Pores
								Ba – Isolated
								Bb – Aligned
								Bc – Regular distributed
								Bd – Grinding defects
								Be – Poor restart
								Bf - Tee defects
								C - Lack of fusion
								D - Lack of penetration
								Da – In bottom of chamfer
								Db – Lack of inter-run fusion
								E - Crack
								Ea – Longitudinal
								Eb – Transverse
								Ec – Crater
								F - Undercut
								Fa – External cavity:
								Fb – Root cavity
								Fc – Excess weld thickness
								Fd – Excess penetration
								Fe – Lack of penetration

									Ff - Fluxing
									G - Slag inclusion
									H - Metallic inclusion
									J - Oxide inclusion
									K - Pit
									Ka - Stop/start crater
									L - Weld splatter:
									T - Tungsten Inclusions

Type of weld	Results		
Type of material : _____	No defect	-	
	Acceptable:	/	Operator
Weld procedure : _____	To repair :	+	
Position:	No defect after repair :	=	
Weld geometry _____	Acceptable after repair :	x	
	Scrap	0	Date: __/__/__

Remarks :

Density of the film conforms to the requirements of EN 1435

Smallest wire visible: I.Q.I.n° : _____ -- _____ mm

Table D.3 – Batch tests – Mechanical tests carried out on sample cylinders

Test and examination results								
Test no	Cast No	Test-piece in accordance with EN 10 002-1 or Figure 7	Yield point, R_{ea} MPa	Tensile strength, R_m MPa	Elongation A %	Bend test 180° without cracking	Hydraulic bursting test (bar)	Description of the fracture
Minimum values specified								

I the undersigned hereby declare that I have checked that the verification operations, tests and checks prescribed in EN 13322-1 :ccyy have been carried out successfully.

Special remarks

.....

.....

General remarks

.....

.....

Certified on (date)

.....

(Place)

.....

(Signature of the issuer)

On behalf of

.....

Annex E
(informative)

Guidance on the application of conformity assessment modules when using this standard

Table E.1 has been drawn up for use when assessing conformity of the product in accordance with the RID/ADR clause 6.2.1.4.4 (b) and the Council Directive 99/36/EC concerning transportable pressure equipment. It shows how some of the requirements listed in the modules are met by the standard. The table is compiled on the basis that all requirements of EN 13322-1 are satisfied, so that all parts of the standard are available for reference in support of the modules. There is a strict link between the tests and examinations listed in the standard and those required by the modules, i.e. the tests and examinations are sufficient for ensuring conformity of the transportable gas cylinders. Where a link is made between documentation and the standard, the standard might not fulfil the requirement completely, but provides some or most of the information required.

The full text of the modules is given in Annex IV, Part I of the Council Directive 99/35/EC which can be found in the Official Journal of the European Communities, No. L 138 of 1999-06-01. Additionally, the Directive requires the application of particular, specified modules, either singly or in combination, according to categories of transportable pressure equipment, as prescribed in Annex V.

Conformity with this standard requires all tests and verifications to be carried out. The table is designed to enable those tests and verifications to be linked to the relevant requirement in each module or combination of modules as foreseen in the Directive 99/36/EC.

Table E.1 — Detailed application of EN 13322-1 to the directive conformity assessment modules

Module	Clause of module	Requirement	Clause(s) of this standard
A (as included in A1)	3	General description	1
	3	Conceptual design	4, 5, 6
	3	Description of solutions adopted . . .	4, 5, 6, 12
	3	Results of design calculations, examinations carried out, etc. Results of examinations	7.1.2 7, 8, 9, 10 7.4, 8.2, 11
	3	Test reports	Annex D
A1		Final assessment by manufacturer	8, 9
		Final assessment during unexpected visits of notified body	Selected from 8, 9
B	3	General description	1
	3	Conceptual design	4, 5, 6
	3	Description of solutions adopted . . .	4, 5, 6, 12
	3	Results of design calculations, examinations carried out, etc. Results of examinations	7.1.2 7, 8, 9, 10 7.4, 8.2, 11

Table E.1 — Detailed application of EN 13322-1 to the directive conformity assessment modules (continued)

Module	Clause of module	Requirement	Clause(s) of this standard
	3	Test reports	Annex D
	3	Information concerning tests	7, 8, 9
	3	Information concerning approvals	7.4
	4.1	Technical documentation with respect to design and manufacturing	4, 5, 6 and 7.1.2
	4.1	Materials	4
	4.2	Solutions meet the requirements of the Directive	4, 5, 6, 12; check that standard is listed in RID/ADR
	4.3	Examinations and tests	7.1, 7.2, 7.3
	5	Issue an EC type-examination certificate	7.4, annex D.1
	6	Notification of modifications	7.1.1 gives guidance on the limits of an approval
B1	3	General description	1
	3	Conceptual design Manufacturing drawings	4, 5, 6 7.1.2
	3	Description of solutions adopted . . .	4, 5, 6, 12
	3	Supporting evidence, results of test	7
	3	Results of design calculations	7.1.2
	4.1	Technical documentation	7.1.2
	4.2	Solutions meet the requirements of the Directive	4, 5, 6, 12; check that standard is listed in RID/ADR
	4.3	Establish that the provisions of the Directive have been applied	Documents in 7.1.2 conform to 4, 5, 6, tests of 7 passed
	5	Issue an EC design-examination certificate	7.4, annex D.1, omitting the design tests and results
	6	Notification of modifications	7.1.1 gives guidance on the limits of an approval
C1	1	EC type examination certificate	7.4, annex D.1
	2	Ensuring product complies to type	8, 9
	4	Final assessment	8.4. 8.5, 8.6, 8.7, 9, 10, 12

Table E.1 — Detailed application of EN 13322-1 to the directive conformity assessment modules (continued)

Module	Clause of module	Requirement	Clause(s) of this standard
D	1	EC type or design examination certificate	7.4, annex D.1
	3.1	Technical documentation EC type or design examination certificate	7.1.2 7.4, annex D.1
	3.2	Examinations and tests	8, 9 and 10, 12
	3.2	Inspection reports and test data	11
	4.2	Inspection reports and test data	11
	4.4	Test during visits	Selected from 8, 9
D1	2	General description	1
	2	Conceptual design and manufacturing drawings	4,5, 6, 7.1.2
	2	Description of solutions adopted . . .	4, 5, 6, 12
	2	Results of design calculations Examinations carried out, etc. Results of examinations	7.1.2 7, 8, 9, 10 7.4, 8.2, 11, annex D
	2	Test reports	Annex D
	4.2	Examinations and tests	7, 8, 9 and 10
	4.2	Inspection reports and test data	7.4, 8.2, 11, annex D
	5.2	Inspection reports and test data	7.4, 8.2, 11, annex D
	5.4	Tests during visits	Selected from 8, 9
E	1	EC type examination certificate	7.4, annex D.1
	3.1	Technical documentation EC type examination certificate	7.1.2 7.4, annex D.1
	3.2	Examinations and tests	8, 9, 10
	3.2	Inspection reports and test data	7.4, 8.2, 11, annex D
	4.2	Technical documentation	7.1.2, 7.4
	4.2	Inspection reports and test data	11, annex D
	4.4	Test during visits	Selected from 8, 9

Table E.1 — Detailed application of EN 13322-1 to the directive conformity assessment modules (continued)

Module	Clause of module	Requirement	Clause(s) of this standard
E1	2	General description	1
	2	Conceptual design and manufacturing drawings	5, 7.1.2
	2	Description of solutions adopted . . .	4, 5, 6, 12
	2	Results of design calculations, Examinations carried out, etc. Results of examinations carried out	7.1.2 7, 8, 9, 10 7, 8, 11
	2	Test reports	7.4, 11, annex D
	4.2	Examinations and tests	7, 8, 9, 10
	4.2	Inspection reports and test data	8.2, 11, annex D.3
	5.2	Technical documentation	7.1.2, 7.4
	5.2	Inspection reports and test data	8.2, 11, annex D.3
	5.4	Test during visits	Selected from 8, 9
F	1	EC type/design examination certificates	7.4
	2	EC type/design examination certificates	7.4
	3	Appropriate examinations and tests	7, 8, 9, 10
	4.1	Final inspections and proof tests	8, 9, 10
	4.2, 4.3	Certificate of conformity	Annex D.3
G	2	Technical documentation	7.1.2
	3	General description	1
	3	Conceptual design	4, 5, 6
	3	Description of solutions adopted . . .	4, 5, 6, 12
	4	Examine design and construction	4, 5, 6, 7.1.2
	4 4.2	Appropriate tests Examine technical documentation	7, 8, 9, 10 7.1.2
	4.2	Assess materials used	4
	4.2	Final Inspection	8.3
	4.2	Proof tests	9

Table E.1 — Detailed application of EN 13322-1 to the directive conformity assessment modules (continued)

Module	Clause of module	Requirement	Clause(s) of this standard
H	3.1	Information on transportable pressure equipment	1
	3.2	Technical design specifications including standards	7.1.2, this EN
	3.2	Examinations and test to be carried out before, during and after manufacture	7, 8, 9, 10
	3.2	Inspection reports and test data	7.4, 8.2, 11, annex D
	4.2	Results of analyses, calculations, Results of tests	7.1.2 (first sentence) 7.4, 8.2, 11
	4.2	Quality records in manufacturing, inspection reports and test data	8.2, 11, annex D
	4.4	Tests during visits	Selected from 8, 9
H1	1(b)	Technical design specifications	7.1.2 , this EN
	1(b)	Necessary supporting evidence for adequacy of technical specifications	4, 5, 6; check that standard is listed in RID/ADR
	1(b)	Results of tests	7.2, 7.3, 7.4
	1(c)	Design meets the requirements of the Directive	Documents in 7.1.2, 7.4 conform with 4, 5, 6;
	1(d)	Notification of modifications	7.1.1 gives guidance on the limits of an approval
	2	Tests during visits	Selected from 8, 9

Bibliography

[1] EN 629-1, Transportable gas cylinders — 25E taper thread for connection of valves to gas cylinders — Part 1: Specification.

[2] EN 629-2, Transportable gas cylinders — 25E taper thread for connection of valves to gas cylinders — Part 2: Gauge inspection.

[3] EN 1800, Transportable gas cylinders — Acetylene cylinders — Basic requirements and definitions.

[4] EN 10052, Vocabulary of heat treatment terms for ferrous products.

[5] ADR, European agreement on the International Carriage of Dangerous Goods by Road

[6] RID, Regulations concerning the International Carriage of Dangerous Goods

[7] 99/36/EC, Council Directive 1999/36/EC of 29 April 1999 on transportable pressure equipment

BS EN 13322-1:2003

BSI — British Standards Institution

BSI is the independent national body responsible for preparing British Standards. It presents the UK view on standards in Europe and at the international level. It is incorporated by Royal Charter.

Revisions

British Standards are updated by amendment or revision. Users of British Standards should make sure that they possess the latest amendments or editions.

It is the constant aim of BSI to improve the quality of our products and services. We would be grateful if anyone finding an inaccuracy or ambiguity while using this British Standard would inform the Secretary of the technical committee responsible, the identity of which can be found on the inside front cover. Tel: +44 (0)20 8996 9000. Fax: +44 (0)20 8996 7400.

BSI offers members an individual updating service called PLUS which ensures that subscribers automatically receive the latest editions of standards.

Buying standards

Orders for all BSI, international and foreign standards publications should be addressed to Customer Services. Tel: +44 (0)20 8996 9001.
Fax: +44 (0)20 8996 7001. Email: orders@bsi-global.com. Standards are also available from the BSI website at ~~http://www.bsi-global.com~~.

In response to orders for international standards, it is BSI policy to supply the BSI implementation of those that have been published as British Standards, unless otherwise requested.

Information on standards

BSI provides a wide range of information on national, European and international standards through its Library and its Technical Help to Exporters Service. Various BSI electronic information services are also available which give details on all its products and services. Contact the Information Centre. Tel: +44 (0)20 8996 7111. Fax: +44 (0)20 8996 7048. Email: info@bsi-global.com.

Subscribing members of BSI are kept up to date with standards developments and receive substantial discounts on the purchase price of standards. For details of these and other benefits contact Membership Administration. Tel: +44 (0)20 8996 7002. Fax: +44 (0)20 8996 7001.
Email: membership@bsi-global.com.

Information regarding online access to British Standards via British Standards Online can be found at ~~http://www.bsi-global.com/bsonline~~.

Further information about BSI is available on the BSI website at ~~http://www.bsi-global.com~~.

Copyright

Copyright subsists in all BSI publications. BSI also holds the copyright, in the UK, of the publications of the international standardization bodies. Except as permitted under the Copyright, Designs and Patents Act 1988 no extract may be reproduced, stored in a retrieval system or transmitted in any form or by any means – electronic, photocopying, recording or otherwise – without prior written permission from BSI.

This does not preclude the free use, in the course of implementing the standard, of necessary details such as symbols, and size, type or grade designations. If these details are to be used for any other purpose than implementation then the prior written permission of BSI must be obtained.

Details and advice can be obtained from the Copyright & Licensing Manager. Tel: +44 (0)20 8996 7070. Fax: +44 (0)20 8996 7553.
Email: copyright@bsi-global.com.

BSI

389 Chiswick High Road

London

W4 4AL