BRITISH STANDARD

BS EN 13021:2003

Winter service machines — Safety requirements

The European Standard EN 13021:2003 has the status of a British Standard

ICS 43.160

British Standards

National foreword

This British Standard is the official English language version of EN 13021:2003.

The UK participation in its preparation was entrusted by Technical Committee B/513, Construction equipment and plant, and site safety, to Subcommittee B/513/5, Tar and asphalt plant, which has the responsibility to:

— aid enquirers to understand the text;

— present to the responsible international/European committee any enquiries on the interpretation, or proposals for change, and keep the UK interests informed;

— monitor related international and European developments and promulgate them in the UK.

A list of organizations represented on this subcommittee can be obtained on request to its secretary.

Cross-references

The British Standards which implement international or European publications referred to in this document may be found in the BSI Catalogue under the section entitled “International Standards Correspondence Index”, or by using the “Search” facility of the BSI Electronic Catalogue or of British Standards Online.

This publication does not purport to include all the necessary provisions of a contract. Users are responsible for its correct application.

Compliance with a British Standard does not of itself confer immunity from legal obligations.

This British Standard was published under the authority of the Standards Policy and Strategy Committee on 5 June 2003

Summary of pages

This document comprises a front cover, an inside front cover, the EN title page, pages 2 to 28, an inside back cover and a back cover.

The BSI copyright date displayed in this document indicates when the document was last issued.

Amendments issued since publication

Amd. No.	Date	Comments

© BSI 5 June 2003

ISBN 0 580 41991 6

Copyright British Standards Institution
Reproduced by IHS under license with BSI - Uncontrolled Copy

Document provided by IHS Licensee=Bureau Veritas/5959906001, 11/09/2004 21:06:15 MST Questions or comments about this message: please call the Document Policy Group at 303-397-2295.

EUROPEAN STANDARD

NORME EUROPÉENNE

EUROPÄISCHE NORM

EN 13021

March 2003

ICS 43.160

English version

Winter service machines - Safety requirements

Machines pour le service hivernal - Prescriptions de sécurité

Maschinen für den Winterdienst - Sicherheitsanforderungen

This European Standard was approved by CEN on 21 November 2002.

CEN members are bound to comply with the CEN/CENELEC Internal Regulations which stipulate the conditions for giving this European Standard the status of a national standard without any alteration. Up-to-date lists and bibliographical references concerning such national standards may be obtained on application to the Management Centre or to any CEN member.

This European Standard exists in three official versions (English, French, German). A version in any other language made by translation under the responsibility of a CEN member into its own language and notified to the Management Centre has the same status as the official versions.

CEN members are the national standards bodies of Austria, Belgium, Czech Republic, Denmark, Finland, France, Germany, Greece, Hungary, Iceland, Ireland, Italy, Luxembourg, Malta, Netherlands, Norway, Portugal, Slovakia, Spain, Sweden, Switzerland and United Kingdom.

EUROPEAN COMMITTEE FOR STANDARDIZATION
COMITÉ EUROPÉEN DE NORMALISATION
EUROPÄISCHES KOMITEE FÜR NORMUNG

Management Centre: rue de Stassart, 36 B-1050 Brussels

© 2003 CEN All rights of exploitation in any form and by any means reserved worldwide for CEN national Members.

Ref. No. EN 13021:2003 E

Copyright British Standards Institution
Reproduced by IHS under license with BSI - Uncontrolled Copy

Document provided by IHS Licensee=Bureau Veritas/5959906001, 11/09/2004 21:06:15 MST Questions or comments about this message: please call the Document Policy Group at 303-397-2295.

Contents

page

Foreword ... 4
Introduction ... 5
1 Scope ... 5
2 Normative references ... 5
3 Terms and definitions ... 6
4 List of significant hazards ... 7
5 Safety requirements and/or measures ... 9
5.1 Design as regards handling ... 9
5.1.1 Attachment fittings ... 9
5.1.2 Locking devices ... 9
5.1.3 Elevating equipment ... 10
5.1.4 Slewing devices ... 10
5.1.5 Disconnectable power and signal-transmitting systems ... 11
5.1.6 Lashing points for demountable machines ... 11
5.2 Controls ... 11
5.2.1 General ... 11
5.2.2 Controls for spreaders ... 12
5.2.3 Controls for snow clearing machines with rotary equipment ... 12
5.3 Access, walkways ... 12
5.4 Hot surfaces ... 12
5.5 Requirements for fluid power systems ... 12
5.5.1 Hydraulic systems ... 12
5.5.2 Pneumatic systems ... 12
5.6 Additional requirements on spreaders ... 13
5.6.1 Worm conveyors, chain conveyors, agitator and crushing equipment ... 13
5.6.2 Belt conveyors ... 13
5.6.3 Spreader distributors ... 13
5.6.4 Covers ... 13
5.7 Additional requirements for snow clearing machines with rotary equipment ... 13
5.7.1 Rotary equipment ... 13
5.7.2 Ejectors ... 14
5.7.3 Aprons ... 14
5.7.4 Aids for clearing snow blockage ... 15
5.7.5 Warning signs ... 15
5.8 Additional requirements for snow ploughs ... 15
5.8.1 Means on snow ploughs for reducing impact caused by driving into solid obstacles ... 15
5.8.2 Snow mist protection, snow screen ... 15
5.9 Marking of vehicles with attached or mounted machines for winter service ... 15
6 Verification ... 16
7 Information for use ... 16
7.1 Operating and maintenance instructions ... 16
7.2 Spare parts list ... 17
8 Marking ... 17
Annex A (informative) Terminology ... 18
Annex B (informative) Truck attachment plate ... 23
Annex C (normative) Safety guards on winter service machines ... 24

Copyright British Standards Institution
Reproduced by IHS under license with BSI - Uncontrolled Copy

Document provided by IHS Licensee=Bureau Veritas/5959906001, 11/09/2004 21:06:15 MST Questions or comments about this message: please call the Document Policy Group at 303-397-2295.

Annex D (normative) Warning sign "Warning of danger ahead".....26
Annex ZA (informative) Relationship of this document with EU Directives.....27
Bibliography 28

Copyright British Standards Institution
Reproduced by IHS under license with BSI - Uncontrolled Copy

Document provided by IHS Licensee=Bureau Veritas/5959906001, 11/09/2004 21:06:15 MST Questions or comments about this message: please call the Document Policy Group at 303-397-2295.

Foreword

This document (EN 13021:2003) has been prepared by Technical Committee CEN/TC 151 "Construction equipment and building material machines - Safety", the secretariat of which is held by DIN.

This European Standard shall be given the status of a national standard, either by publication of an identical text or by endorsement, at the latest by November 2003, and conflicting national standards shall be withdrawn at the latest by November 2003.

This document has been prepared under a mandate given to CEN by the European Commission and the European Free Trade Association, and supports essential requirements of EU Directive(s).

For relationship with EU Directive(s), see informative annex ZA, which is an integral part of this document.

Annex A is informative and contains "Terminology", annex B is informative and shows a "Truck attachment plate", annex C is normative and contains "safety guards on winter service machines" and annex D is normative and contains "Warning sign — Warning of danger ahead".

According to the CEN/CENELEC Internal Regulations, the national standards organizations of the following countries are bound to implement this European Standard: Austria, Belgium, Czech Republic, Denmark, Finland, France, Germany, Greece, Hungary, Iceland, Ireland, Italy, Luxembourg, Malta, Netherlands, Norway, Portugal, Slovakia, Spain, Sweden, Switzerland and the United Kingdom.

Copyright British Standards Institution
Reproduced by IHS under license with BSI - Uncontrolled Copy

Document provided by IHS Licensee=Bureau Veritas/5959906001, 11/09/2004 21:06:15 MST Questions or comments about this message: please call the Document Policy Group at 303-397-2295.

Introduction

This European Standard is a Type C-standard as stated in EN 292.

The machinery concerned and the extent to which hazards are covered is indicated in the scope of this standard.

1 Scope

This European Standard applies to winter service machines which are defined in clause 3.

This European Standard deals with all significant hazards (see clause 4) identified through a risk assessment pertinent to winter service machines when they are used as intended and under the conditions foreseen by the manufacturer. This European Standard does not deal with significant hazards associated with noise and EMC.

This European Standard specifies the appropriate technical measures to eliminate or reduce risks arising from the significant hazards associated only with machine operation, setting and adjustments, load discharge and routine maintenance.

Winter service machines are normally mounted on carrier vehicles (e.g. trucks, tractors, construction machinery and mobile industrial handling equipment). This European Standard does not cover requirements for the carrier vehicles even where specific modifications have been made to realise the winter service application. These requirements will be handled in directives and standards for the construction of carrier vehicles. The use of winter service machines in public road traffic is governed by national regulations.

This standard does not cover any requirements for demountable bodywork systems (e.g. demountable containers). These requirements are specified in other standards.

This European Standard does not deal with:

- machines or components which are solely designed for clearing rails such as rail sweepers or blowers;
- walker-operated and hand-held winter service machines;
- highway maintenance machines covered by prEN 13524, such as front-mounted sweepers;
- machines for the maintenance of sports grounds;
- machines for agriculture, horticulture and forestry;
- machines intended for use in potentially explosive atmospheres.

This European Standard applies to winter service machines which are manufactured after the date of approval of the standard by CEN.

2 Normative references

This European Standard incorporates by dated or undated references, provisions from other publications. These normative references are cited at the appropriate places in the text, and the publications are listed hereafter. For dated references, subsequent amendments to or revisions of any of these publications apply to this European Standard only when incorporated in it by amendment or revision. For undated references the latest edition of the publication referred to applies (including amendments).

Copyright British Standards Institution
Reproduced by IHS under license with BSI - Uncontrolled Copy

Document provided by IHS Licensee=Bureau Veritas/5959906001, 11/09/2004 21:06:15 MST Questions or comments about this message: please call the Document Policy Group at 303-397-2295.

EN 292-1:1991, Safety of machinery — Basic concepts, general principles for design — Part 1: Basic terminology, methodology.

EN 292-2:1991, Safety of machinery — Basic concepts, general principles for design — Part 2: Technical principles and specifications.

EN 294, Safety of machinery — Safety distances to prevent danger zones being reached by the upper limbs.

EN 563, Safety of machinery — Temperatures of touchable surfaces — Ergonomics data to establish temperature limit values for hot surfaces.

EN 620, Continuous handling equipment and systems — Safety and EMC requirements for fixed belt conveyors for bulk materials.

EN 953:1996, Safety of machinery — Guards — General requirements for the design and construction of fixed and movable guards.

EN 982:1996, Safety of machinery — Safety requirements for fluid power systems and there components — Hydraulics.

EN 983, Safety of machinery — Safety requirements for fluid power systems and there components — Pneumatics.

EN 1070:1998, Safety of machinery — Terminology.

EN ISO 2867, Earth-moving machinery — Access systems (ISO 2867:1994).

ISO 6750, Earth-moving machinery — Operation and maintenance — Format and content of manuals.

3 Terms and definitions

For the purposes of this European Standard, the terms and definitions given in EN 1070 together with the following apply.

3.1
winter service machines
machines for maintaining traffic areas free of ice and snow during the winter

3.2
snow ploughs
machines with which snow can be cleared from traffic areas by pushing aside with a plough blade

3.3
snow removing machines with rotating tools
machines with which snow can be removed from traffic areas by rotating means, accelerated and ejected by blower means

3.4
spreaders
machines for defined application of substances to traffic areas to maintain or improve the skid resistance of the pavement

3.5
traffic areas
paved areas on which there is vehicular and/or pedestrian traffic. Not included are rail tracks which are solely for rail-mounted traffic, as well as traffic areas inside buildings and underground.

3.6
demountable equipment
equipment that may be demounted from and remounted to the carrier vehicle

Copyright British Standards Institution
Reproduced by IHS under license with BSI - Uncontrolled Copy

Document provided by IHS Licensee=Bureau Veritas/5959906001, 11/09/2004 21:06:15 MST Questions or comments about this message: please call the Document Policy Group at 303-397-2295.

3.7
operating area
area in which the work procedures are carried out e.g. removal of snow by precutting tools, rotating plough or blower equipment

3.8
rear area
area at the rear of the vehicle where hazards can occur due to a rearwards movement of the vehicle

3.9
reject ring
cover having the shape of a ring or a disk which is attached to a rotating body (e.g. sidewards of rotary plough tool) to provide protection against drawing-in or trapping

3.10
lashing point
point or device (e.g. ring device) at the machine or at the demountable equipment which allows its lifting by a appropriate lifting device

4 List of significant hazards

This clause contains all hazards and hazardous situations, as far as they are dealt with in this European Standard, identified by risk assessments significant to this type of machinery that require action to eliminate or reduce risk.

Table 1

Hazards		Typical location of hazard	Relevant clauses
1	Mechanical hazards (caused for example by: shape; relative location; mass and stability; (potential energy of elements) mass and velocity; (kinetic energy of elements) inadequacy of mechanical strength accumulation of potential energy by: • elastic elements (springs), or • liquids or gases under pressure or • vacuum of the machine or parts or workpieces).		

Copyright British Standards Institution
Reproduced by IHS under license with BSI - Uncontrolled Copy

Document provided by IHS Licensee=Bureau Veritas/5959906001, 11/09/2004 21:06:15 MST Questions or comments about this message: please call the Document Policy Group at 303-397-2295.

Table 1 (continued)

Hazards		Typical location of hazard	Relevant clauses
1.1	Crushing hazards	Coupling area of machines	5.1.1
		Beneath lifting and lowering machines and machine parts	5.1.3
		Slewing area of machines and machine parts	5.1.5
		Worm conveyors, chain conveyors of spreaders, agitator and crushing equipment (access to inner receptacle)	5.5.1
		Belt conveyor of spreaders	5.5.2 5.3
1.2	Shearing hazard	Ladders Slewing area of ejectors Coupling area of machines Worm conveyors, chain conveyors of spreaders, agitator and crushing equipment (access to inner receptacle)	5.6.2 5.1.1 5.5.1
1.3	Cutting or severing hazard	Slewing area of machines and machine parts Slewing area of ejectors Spinner disc on spreaders Beneath lifting and lowering machines and machine parts	5.1.4 5.6.2 5.5.3.1 5.1.3
1.4	Entanglement hazard	Slewing area of machines and machine parts Slewing area of ejectors Worm conveyors, chain conveyors of spreaders, agitator and crushing equipment Drive and guide rollers of the belt conveyor of spreaders Rotary tools	5.1.4 5.6.2 5.5.1 5.5.2 5.6.1
1.5	Drawing-in or trapping hazard	Drive and guide rollers of belt conveyor of spreaders Rotary tools Ejectors on snow clearing machines with rotary tools	5.5.2 5.6.1 5.6.2
1.6	Impact hazard	Impact caused by driving into solid obstacles with the snow plough	5.7.1
1.7	Ejection of parts (of machinery and processed material/ workpieces)	Ejection of solid objects from snow clearing machines with rotary tools	5.6.1 5.6.3
1.8	Loss of stability(of machinery and machine parts)	Supports for machines	5.1.5
1.9	Slip, trip and fall hazards in relationship with machinery (because of their mechanical nature)	Access ladders and walkways	5.3
1.10	High pressure fluid ejection	Power transmission lines	5.5.1 5.5.2

Copyright British Standards Institution
Reproduced by IHS under license with BSI - Uncontrolled Copy

Document provided by IHS Licensee=Bureau Veritas/5959906001, 11/09/2004 21:06:15 MST Questions or comments about this message: please call the Document Policy Group at 303-397-2295.

Table 1 (concluded)

2	Thermal hazards resulting in:		
2.1	burns and scalds, by a possible contact of persons, by flames or explosions and also by the radiation of heat sources	Workstations on machines powered by internal combustion engines	5.4
3	Hazards generated by materials and machinery for example:		
3.1	substances processed, used or exhausted by hazards resulting from contact with or inhalation of harmful fluids, gases, mists, fumes and dusts	Sprinkle area of thawing solutions 6.1	
4	Hazards generated by neglecting ergonomic principles in machine design (mismatch of machinery with human characteristics and abilities) caused for example by:		
4.1	unhealthy postures or excessive efforts	Slewable spreader distributors	5.5.3.2
4.2	mental overload or underload, stress etc.	Covering of the windscreen with snowparticles when using snow ploughs	5.7.2 5.8.2

5 Safety requirements and/or measures

The machines shall comply with the safety requirements and / or measures of this clause. In addition the machines shall be designed to comply with the requirements of EN 292-1 and EN 292-2 for hazards that are significant but not dealt with, and for those that are relevant but not significant and therefore are not dealt with in this standard.

For the application of the reference standards EN 563, EN 953, EN 982 and EN 983 which are used in this standard, the manufacturer shall carry out an adequate risk assessment relating to those requirements for which a special safety measure or -category is necessary.

NOTE This specific risk assessment should be part of the general risk assessment relating to the hazards not covered by this standard.

Where the means of reducing the risk is by a safe system of operating the machinery, the manufacturer shall include in the information for use details of the system and of the elements of training required by the operating personnel.

5.1 Design as regards handling

5.1.1 Attachment fittings

Attachment fittings on winter service machines shall be designed so that during the actual coupling and de-coupling action nobody is required to be in the hazard zone between the components concerned.

NOTE This requirement can be satisfied by attachment fittings designed in conformity with annex B (for front fittings by adapter plates), or with ISO 730-1 in conjunction with ISO 11001 (for front and rear attachments respectively using three-point linkage).

5.1.2 Locking devices

Mechanical locking devices shall be designed to have positive engagement and to be connected with the machine so that they can not be lost.

Copyright British Standards Institution
Reproduced by IHS under license with BSI - Uncontrolled Copy

Document provided by IHS Licensee=Bureau Veritas/5959906001, 11/09/2004 21:06:15 MST Questions or comments about this message: please call the Document Policy Group at 303-397-2295.

5.1.3 Elevating equipment

a) Elevating equipment shall be constructed or designed so that during intended use any lowering of the load[1)] is prevented.

This requirement shall be achieved for example by the provision of:

- check valves or similar functions within the control valves of hydraulic or pneumatic lifting equipment; or,
- self-locking actuators or automatically engaging latches in arrangement with a ratchet wheel for mechanical winches; or,
- control valves as reverse-flow prevention mechanism. Non-return valves (burst pipe protection) mounted directly on the lifting cylinder are not necessary unless workmen have to move underneath raised or tilted machine components as part of working procedure[2)]; or,
- other locking devices conforming to 5.1.2.

b) If persons have to enter beneath elevated machines or machine components when used as intended and under conditions foreseen by the manufacturer (e.g. maintenance, clearing, inspection) it is necessary to prevent unintended lowering of the elevated parts by providing safeguards, for example, by:

- automatically engaging mechanical locking devices; or
- pilot check valves integrated into the lifting cylinder; or
- mechanical locking devices which are operated from outside of the hazard area.

c) Powered lifting devices shall be equipped to eliminate the possibility of equipment returning in free fall.

In hydraulic or pneumatic systems, this requirement shall be satisfied when the reverse flow is restricted by a non-return valve or an appropriately sized orifice.

d) Access to safeguards against return and free fall of lifting means shall be possible only with the use of tools.

e) Demountable attachments and equipment shall be so designed and constructed that they can be mounted and dismounted safely.

Powered systems shall incorporate a suitable form of synchronisation of the individual lifting elements of a lowering device. Where lifting elements are controlled independently of each other, each shall be provided with an interlock (e.g. shut-off valve on the hydraulic cylinder). Manually actuated lifting systems shall select the pitch of the spindle thread such that it is self-locking in every spindle position.

f) The manufacturer shall include in the information for use details of the safe working practices to be observed and the elements of training to be provided to the operators.

5.1.4 Slewing devices

Moving and slewing shall be by a controlled movement.

Unintentional movements of slewing devices and uncontrolled movements of components of winter service machines shall be prevented.

---

1) Accidental lowering is when a load runs back or descends because of an interruption or an irregularity in the energy supply.

2) The term "as part of working procedure" does not cover repair work.

Copyright British Standards Institution
Reproduced by IHS under license with BSI - Uncontrolled Copy

Document provided by IHS Licensee=Bureau Veritas/5959906001, 11/09/2004 21:06:15 MST Questions or comments about this message: please call the Document Policy Group at 303-397-2295.

Mechanical locks or appropriate valves in hydraulic or pneumatic actuated systems may be used to achieve a controlled movement.

5.1.5 Support equipment for machines and components

Supporting means shall be designed and positioned or be able to be positioned so that the machine can be safely supported on level, stable ground.

Supporting means shall be connected to the machine by means of positive engagement.

The distance between the support legs shall be dimensioned to permit safe movements of the carrier vehicle during the mounting and demounting process.

Where the supporting means cannot carry the gross overall weight of the demounted machine (structural weight plus effective load) it shall be clearly marked with the maximum load which can be supported. Warning signs shall be fixed visible to the operator drawing attention to the need to check that the load to be supported does not exceed the maximum load which can be supported.

Supporting means employed for moving the machinery when demounted shall be fitted with equipment that prevents any unintentional movement in the unattended condition.

The manufacturer shall provide advice on safe working practices for the use of the supporting means in the information for use.

5.1.6 Disconnectable power and signal-transmitting systems

Disconnectable power and signal-transmitting systems shall be provided with suitable connecting elements appropriate to their operating environment. Disconnectable hydraulic fluid power systems shall be provided with suitable, self-sealing coupling elements. If several coupling elements are grouped in a location, it shall be ensured that incorrect connections do not give rise to a hazardous situation. This can be achieved e.g. by providing non-interchangeable connections or by using unambiguous, permanent markings.

5.1.7 Lashing points for demountable machines

Lashing points shall be provided for the safe fastening down of demountable machines. These can also be in the form of construction parts of the machine.

Appropriate instructions which also include specifications on suitable means of lashing and for compatibility with the carrier vehicle shall be given by the manufacturer in the information for use.

5.2 Controls

5.2.1 General

a) Controls for elevating and slewing movements shall be designed so that they automatically return to zero position when released. This does not apply to mechanisms that necessitate a float or pressure position for their function and also does not apply to continuously operating mechanisms such as hydraulic motors etc.

b) Controls for hazardous movements of elevating, lowering and swivel devices shall be protected against unintentional operation.

   This is accomplished, for example by:

   guards;

   mechanical locking;

   locking through key-operated switch.

Copyright British Standards Institution
Reproduced by IHS under license with BSI - Uncontrolled Copy

Document provided by IHS Licensee=Bureau Veritas/5959906001, 11/09/2004 21:06:15 MST Questions or comments about this message: please call the Document Policy Group at 303-397-2295.

5.2.2 Controls for spreaders

Controls for adjusting the amount and width of spreading shall be positioned outside the operating area (hazard zone).

This requirement can be satisfied when spreaders are controlled by remote control from the cab.

5.2.3 Controls for snow clearing machines with rotary equipment

5.2.3.1 It shall be possible to stop the rotary plough or blower equipment without stopping the drive motor by means of a disengageable clutch between the equipment and the motor, or a braking device. It shall be possible to secure this device to prevent an unintentional re-start.

5.2.3.2 Controls for starting and stopping rotary equipment and for adjusting ejector equipment shall be positioned so that the operator is neither endangered by the ejected material nor by moving parts of the equipment.

This requirement shall be achieved for example:

by controls mounted remote from the danger zone; or,

by adjustable mechanical controls for attached machines which shall be easily and safely reached by the operator in every position of the machine.

5.3 Access, walkways

Hinged parts of ladders shall be designed with clearances so that trapping or shear risks are eliminated during movement.

Hinged parts that can be raised to an upper position shall be positively locked in that position.

Where equipment requiring regular access and walking on is away or inaccessible from the ground level, access ladders, walkways and standing areas complying with EN ISO 2867 shall be provided.

The bottom step or rung of a ladder shall not be more than 650 mm away from the ground level.

The steps / rungs shall be at least 250 mm wide.

5.4 Hot surfaces

Temperatures of surfaces of machinery with which the operator may come into contact shall conform to EN 563. This shall be achieved by the use of guards (e.g. perforated plates placed in front of or around the hot surfaces) or be positioned to avoid unintended risk of contact. Where guarding is impractical, e.g. engine radiator caps, adequate warning signs shall be employed advising on the nature of the risk and avoidance measures shall be described in the information for use.

5.5 Requirements for fluid power systems

5.5.1 Hydraulic systems

Hydraulic systems shall be designed and components selected in conformance with EN 982:1996.

5.5.2 Pneumatic systems

Pneumatic systems shall be designed and components selected in conformance with EN 983:1996.

Copyright British Standards Institution
Reproduced by IHS under license with BSI - Uncontrolled Copy

Document provided by IHS Licensee=Bureau Veritas/5959906001, 11/09/2004 21:06:15 MST Questions or comments about this message: please call the Document Policy Group at 303-397-2295.

5.6 Additional requirements on spreaders

5.6.1 Worm conveyors, chain conveyors, agitator and crushing equipment

Access to auger or chain conveyors, as well as to agitator and crushing equipment, except through discharge openings shall be prevented during movement. Guards conforming to the dimensions given in Figure C.1 and otherwise conforming to the requirements of the EN 294 shall be provided.

This requirement is satisfied e.g. by providing guarding devices bolted to the container, or by hinged grid -type guards or fabric covers which automatically stop movement of the guarded mechanism when lifted up.

Interlocking safety devices and permanent guard fixings shall not be rendered ineffective without tools or expedients.

5.6.2 Belt conveyors

Drums and rollers of belt conveyors on spreaders at which the traction elements are turned or deflected shall be protected so that persons cannot get trapped in the running positions.

This requirement shall be satisfied, for example by:

enclosing the conveyor equipment in a housing; or,

filler pieces which cover the entire width of the running positions; or;

sliding or guide rails which can be extended to the running positions, and having transverse covers or filler pieces in front of the running positions.

For safety devices for belt conveyors see EN 620.

5.6.3 Spreader distributors

5.6.3.1 Finger access shall be prevented from reaching the spinner discs on spreaders by a top cover in accordance with EN 294 which extends at least 25 mm beyond the outer diameter of the spinner disc. This cover shall be of a solid or bar-type enclosure (see Figure C.2). Lifting the spreader distributor shall automatically disengage the spinner disc drive, and an automatic re-start shall not be possible.

NOTE This requirement does not apply to the area of aperture for spreading material and for adjusting the input location for spreading pattern.

5.6.3.2 Swivel spreader distributors shall be provided with grabs, and the lifting force shall not exceed 250 N.

5.6.4 Covers

Covers for spreader containers shall be so designed that they can be manually operated from the ground level. Any shearing hazards arising from the operation shall be avoided by designing gaps with not less than 25 mm clearance.

5.7 Additional requirements for snow clearing machines with rotary equipment

5.7.1 Rotary equipment

Rotary snow blower equipment shall be safeguarded by covers with the exception of the operating area.

On rotary ploughs this requirement is satisfied when either

rotary ploughs are covered on both sides

Copyright British Standards Institution
Reproduced by IHS under license with BSI - Uncontrolled Copy

Document provided by IHS Licensee=Bureau Veritas/5959906001, 11/09/2004 21:06:15 MST Questions or comments about this message: please call the Document Policy Group at 303-397-2295.

or

both ends of rotary plough equipment are solid-walled. In the edge zone of the ends the solid-wall enclosure may be replaced by a maximum of two reject rings. The cavity between the solid-wall enclosure and the reject ring or between each reject ring shall not exceed 50 mm. No part of the rotary plough equipment shall protrude radially past the solid-wall enclosure by more than 25 mm and axially by more than 10 mm.

On snow blower equipment this requirement is satisfied when

the blower equipment is enclosed at the periphery; on side blowers the blower equipment may protrude past the enclosure at the work ends by not more than 50 mm;

and

no shear positions occur between the blower equipment and the enclosure.

5.7.2 Ejectors

Rotary snow ploughs and snow blowers and their ejectors shall safeguard the operator from hazardous movements when clearing a snow blockage.

This requirement is satisfied when

ejectors are designed in accordance with EN 294.

or

the ejectors are dimensioned at least 550 mm long – measured from the outer diameter of the rotary snow plough or snow blower (see Figure C.3), and the run-on time – as measured during idle speed – does not exceed 10 s

or

the ejectors are guarded permanently so that fingers are prevented from reaching moving parts and the run of the rotary plough or blower tool stops automatically at least within 10 s after the controls are released – as measured at idle speed. The following dimension limits shall be observed (see Figure C.4):

distance from the upper edge of the guarding to the hazardous location min. 230 mm;

distance between guard bars max. 40 mm;

distance of bars from rear wall of ejector max. 80 mm;

distance from hazardous location min. 120 mm.

NOTE ‘Run-on time’ is the time between disengagement of the drive and stand-still of the rotating equipment.

5.7.3 Aprons

Snow cutters shall be equipped with aprons covering the rotary plough to prevent debris from flying in the forward direction.

NOTE These aprons are especially necessary on rotary snow ploughs having a rotary plough designed for both ploughing and ejection.

Aprons shall have an operating area designed so, that the operator will not be exposed to by directly ejected snow.

Copyright British Standards Institution
Reproduced by IHS under license with BSI - Uncontrolled Copy

Document provided by IHS Licensee=Bureau Veritas/5959906001, 11/09/2004 21:06:15 MST Questions or comments about this message: please call the Document Policy Group at 303-397-2295.

5.7.4 Aids for clearing snow blockage

Snow removing machines with rotating tools shall be equipped with aids for clearing snow blockage.

If mechanical aids are provided, these shall be stored securely on the machine outside the area of movable machine parts or it shall be possible to store them in the carrier vehicle.

A durable and prominent warning sign as to the hazards involved in clearing a snow blockage shall be provided on ejectors (see annex D).

This requirement is satisfied e.g. when the warning sign is provided in accordance with annex D having the following wording: "Clear blockage only when plough/blower is OFF by using only the wooden peg/shovel provided."

5.7.5 Warning signs

To warn about the residual hazards there shall be warning signs on snow clearing machines with rotary equipment. These signs shall be fixed on the machine so that they are clearly visible.

Such residual hazards are ejected objects and rotary equipment while the machine is working.

5.8 Additional requirements for snow ploughs

5.8.1 Means on snow ploughs for reducing impact caused by driving into solid obstacles

Snow moving front and side attachment snow ploughs acting to one side shall be equipped with a means for safeguarding against the impact caused when hitting an obstacle projecting above the pavement.

Such means shall be:

shear points (shear pins); or,

release devices for the snow plough sections; or,

spring-loaded flaps on the snow blade; or,

flexible guides for the attachment of the plough blade; or,

provision within the hydraulic systems.

The means provided shall release safely when driving at any operating speed up to 40 km/h over an obstacle which projects 50 mm out of the traffic area.

NOTE Snow blades which remove frozen parts from the traffic area, as intended, and which clear at a lower working speed (e.g. V-shaped snow plough, ice cutter) do not require such means.

5.8.2 Snow mist protection, snow screen

Snow ploughs for operating at speeds in excess of 40 km/h shall so designed to prevent the formation of snow mist, or shall be provided with means to prevent interference with the view of the driver by snow mist.

5.9 Marking of vehicles with attached or mounted machines for winter service

Vehicles with attached or mounted machines for winter service shall be specially marked in accordance with the respective national regulations.

Copyright British Standards Institution
Reproduced by IHS under license with BSI - Uncontrolled Copy

Document provided by IHS Licensee=Bureau Veritas/5959906001, 11/09/2004 21:06:15 MST Questions or comments about this message: please call the Document Policy Group at 303-397-2295.

6 Verification

The verification of the safety requirements is self evident or is prescribed in the pertinent clauses in this standard.

The verification methods of the safety requirements shall be based on

- Examination of documents (e.g. calculations, drawings, control logic),
- Checking information for use,
- Visual examination of the machine and
- Functional checks and functional tests.

7 Information for use

The written instructions shall be drawn up according to 5.5 of EN 292-2:1991.

At least the following information for use shall be included:

7.1 Operating and maintenance instructions

Winter service machines shall be provided with operating instructions and information in accordance with ISO 6750. They shall contain at least the following information:

information on the intended use and hazard avoidance measures;

advice on the qualification of the operating personnel and elements to be included in their training in safe working practices;

advice that winter service machines shall only be operated by specially trained personnel;

information on transport, weight, location of centre of gravity;

information on attachment points and positioning points for lifting equipment;

information on safe mounting, fixing and checking of demountable machinery on the carrier vehicle;

information on safe use of supporting means of demountable machinery;

description of the controls and their functions;

information on residual risks which cannot be ruled out despite safety measures incorporated by the designer (e.g. ejected objects, risk of injury through rotating tools) and advice for the use of personal protection equipment;

advice that maintenance work in hydraulic systems shall only to be carried out by specially trained personnel;

information on noise emission according to 1.7.4 f) of annex A of EN 292-2:1991.

The operating instructions of spreaders for the application of thawing liquids shall state, that persons are forbidden to stay in the spraying area while working.

Copyright British Standards Institution
Reproduced by IHS under license with BSI - Uncontrolled Copy

Document provided by IHS Licensee=Bureau Veritas/5959906001, 11/09/2004 21:06:15 MST Questions or comments about this message: please call the Document Policy Group at 303-397-2295.

7.2 Spare parts list

The spare parts list shall contain all relevant safety related spare parts with an unambiguous identification and information of the location of the part to be replaced.

8 Marking

In addition to the requirements of EN 292-2:1991, 5.4. the following information shall be indicated on spreaders:

Mandatory marking[3]) ;

Name and address of manufacturer;

Machine serial number;

Machine model or type, separately or within the serial number;

Year of manufacture, separately or within the serial number.

Additional useful information that may be marked on the machine:

maximum capacity of spreader material container in m^3;

weight empty and full in kg.

3) For EU countries, CE mark

Copyright British Standards Institution
Reproduced by IHS under license with BSI - Uncontrolled Copy

Document provided by IHS Licensee=Bureau Veritas/5959906001, 11/09/2004 21:06:15 MST Questions or comments about this message: please call the Document Policy Group at 303-397-2295.

Annex A
(informative)

Terminology

Table A.1 — Terminology

Figure	English Term:	German Term:	French Term:
A.1	Spreader with worm conveyor	Streumaschine mit Schneckenförderer	Epandeuse à système d'extraction à vis
A.2	Spreader with belt conveyor	Streumaschine mit Bandförderer	Epandeuse à système d'extraction à tapis
A.3	Snow plough	Schneepflug	Outil de raclage (lame biaise / étrave)
A.4	Snow clearing machine with rotary snow plough – snow cutter	Schneeräummaschine mit rotierendem Werkzeug –Schneefräse	Fraise de déneigement à axe transversal
A.5	Snow clearing machine with rotary snow blower – snow blower	Schneeräummaschine mit rotierendem Werkzeug-Schneeschleuder	Turbine / Fraise de déneigement à axe longitudinal
A.6	Snow clearing machine with plough/blower	Schneeräummaschine mit rotierendem Werkzeug –Frässchleuder	Fraise de déneigement à axe transversal et dispositif d'éjection
A.7	Attachment	Anbaueinrichtung	Dispositif d'attelage
A, C, D	Rotary plough tool	Fräswerkzeug	Fraise
B	Blower tool	Schleuderwerkzeug	Turbine d'éjection
E	Pre-cutting tool	Vorschneidwerkzeug	Brise glace
F	Ejection device	Auswurfeinrichtung	Ejecteur
G	Collection device	Auffangeinrichtung	Collecteur
H	Spreader distributor	Streustoffverteiler	Dispositif d'épandage
I	Worm conveyor	Schneckenförderer	Convoyeur à vis
K	Belt conveyor	Bandförderer	Convoyeur à bande
L	Spinner disc	Streuteller	Disque d'épandage
M	Cover	Abdeckung	Capot / Couvercle

Copyright British Standards Institution
Reproduced by IHS under license with BSI - Uncontrolled Copy

Document provided by IHS Licensee=Bureau Veritas/5959906001, 11/09/2004 21:06:15 MST Questions or comments about this message: please call the Document Policy Group at 303-397-2295.

Figures for Table A.1

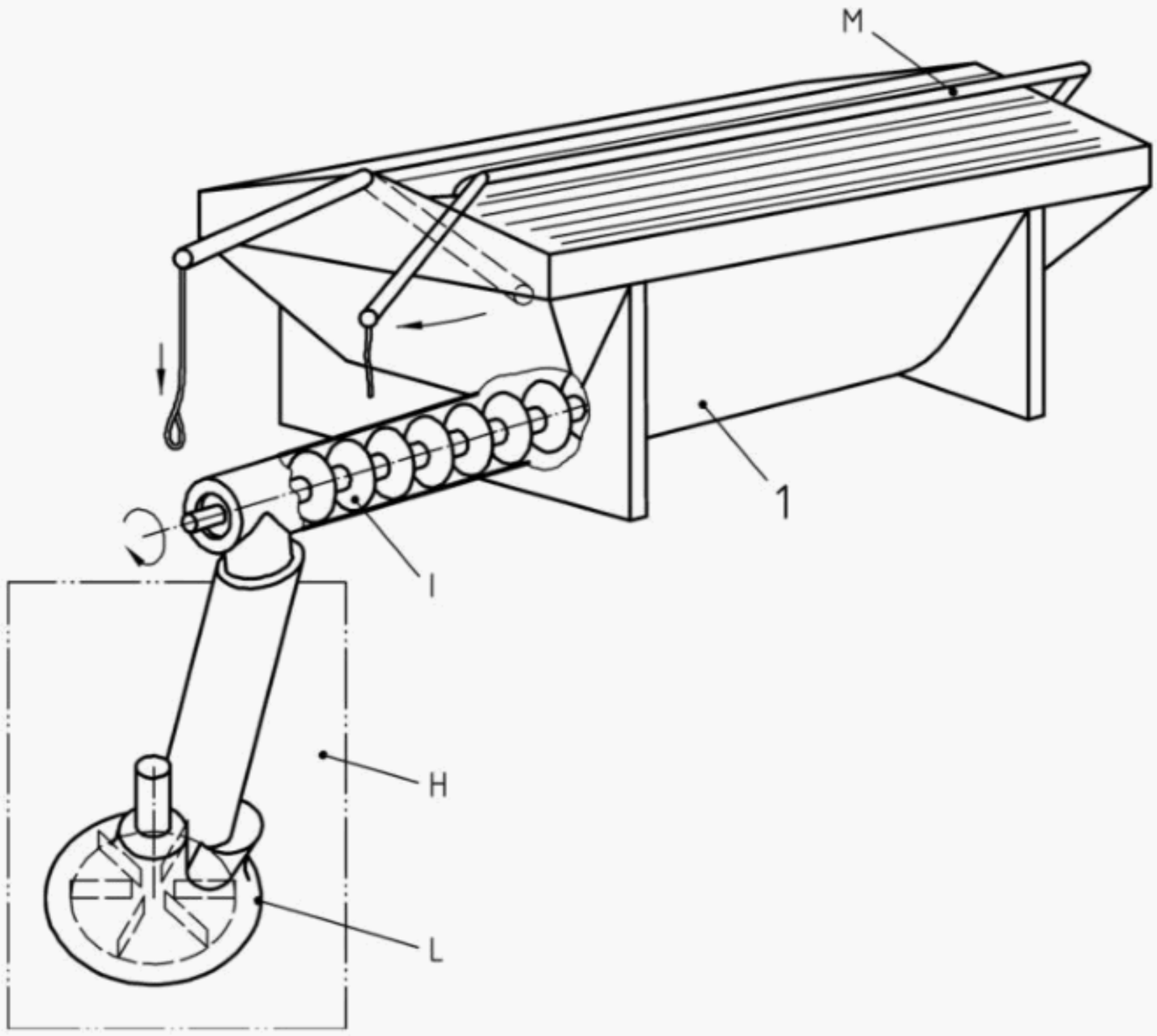

Figure A.1 — Spreader with worm conveyor (1)

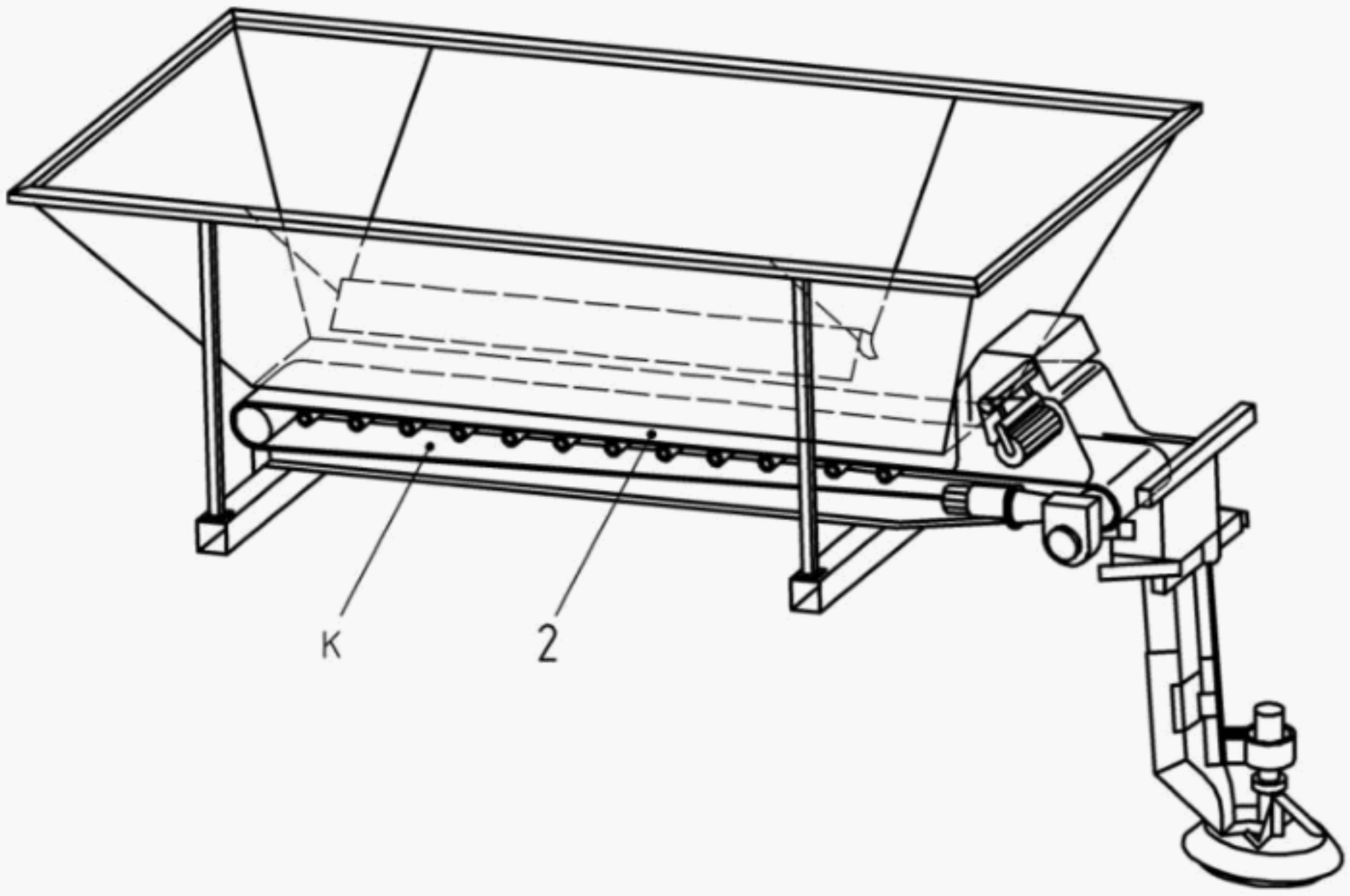

Figure A.2 — Spreader with belt conveyor (2)

Copyright British Standards Institution
Reproduced by IHS under license with BSI - Uncontrolled Copy

Document provided by IHS Licensee=Bureau Veritas/5959906001, 11/09/2004 21:06:15 MST Questions or comments about this message: please call the Document Policy Group at 303-397-2295.

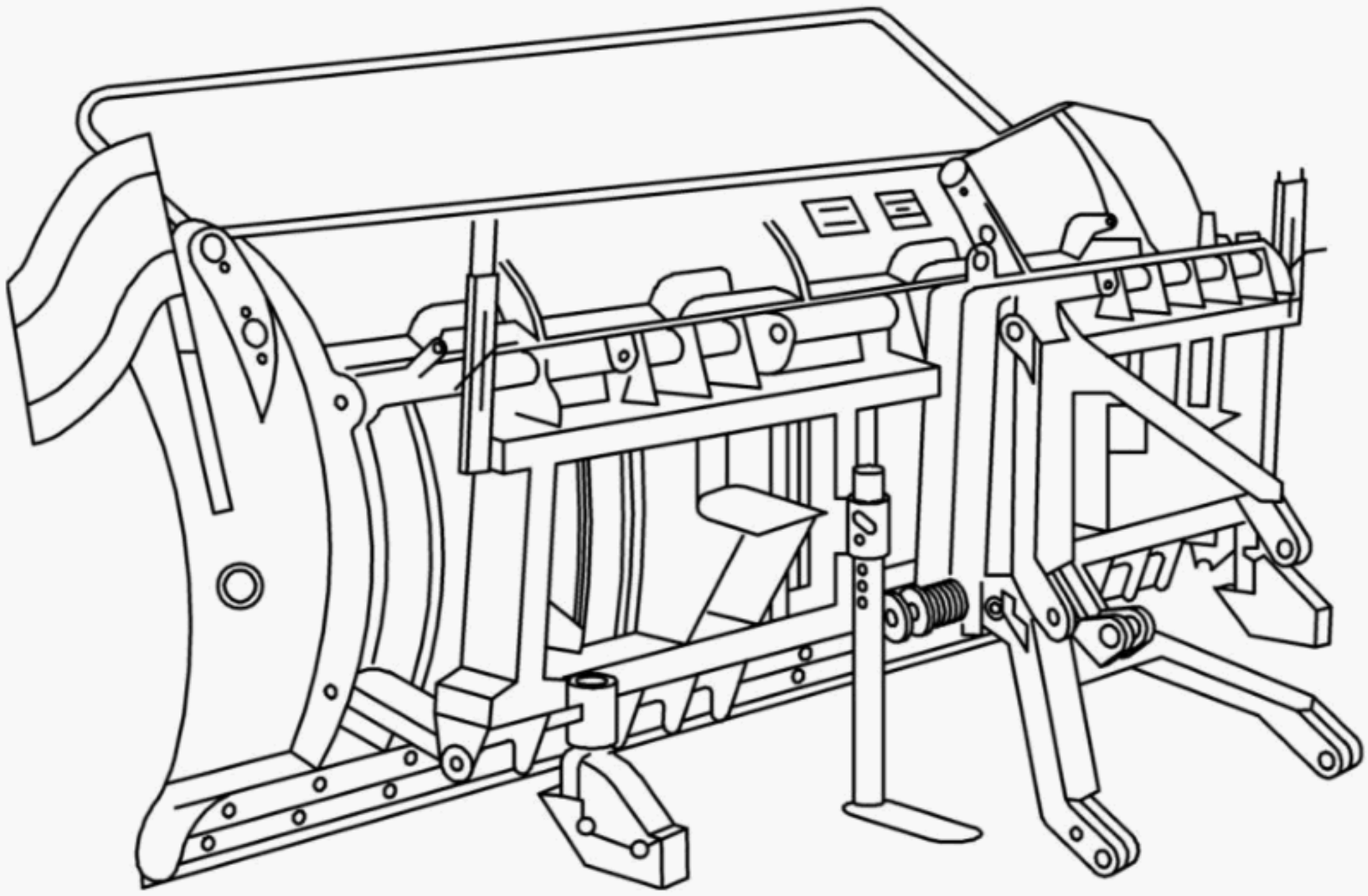

Figure A.3 — Snow plough

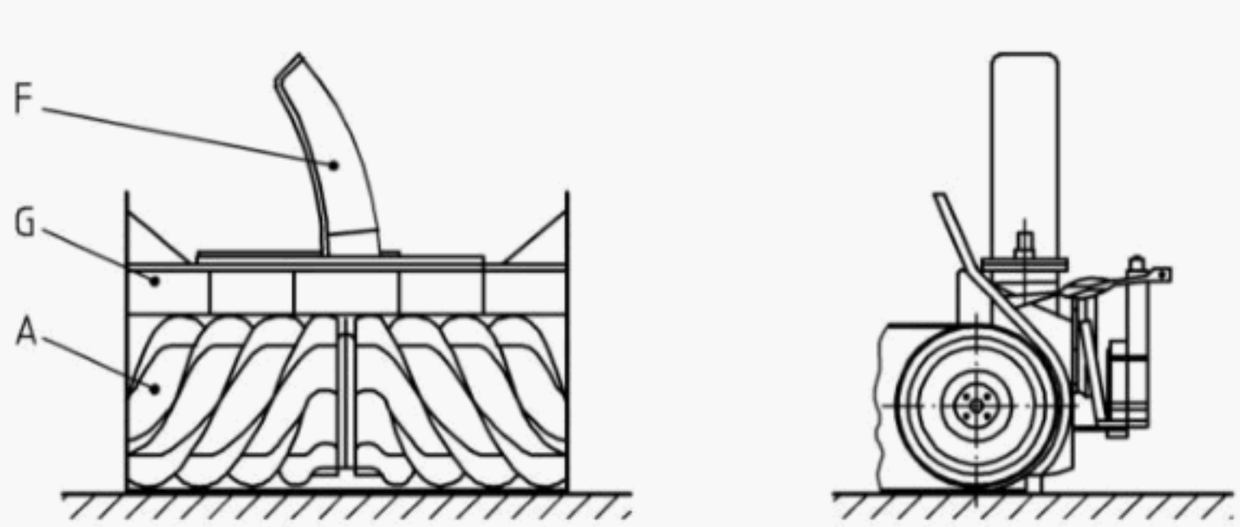

Figure A.4 — Snow clearing machine with rotary snow plough

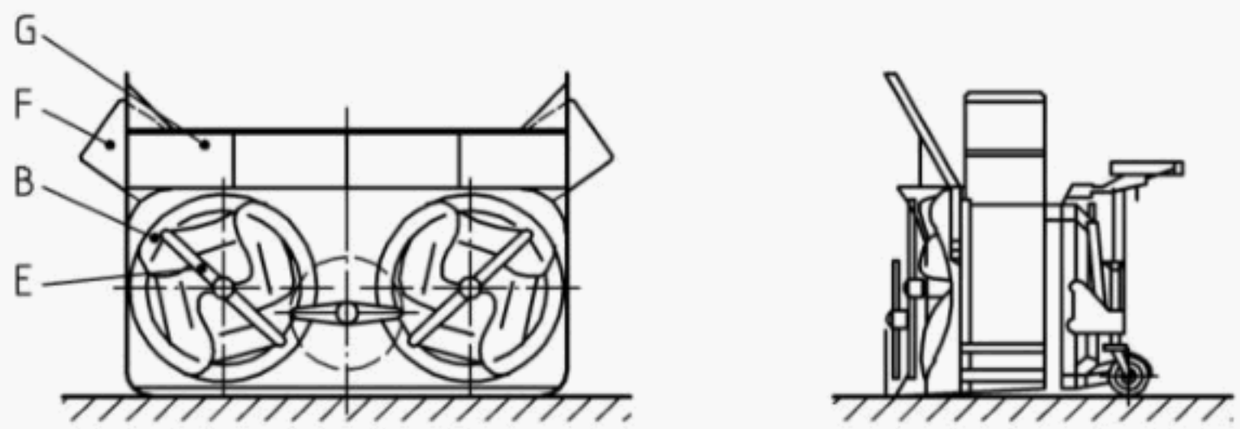

Figure A.5 — Snow clearing machine with rotary snow blower
(2 blower tools / 3 precutting tools)

Copyright British Standards Institution
Reproduced by IHS under license with BSI - Uncontrolled Copy

Document provided by IHS Licensee=Bureau Veritas/5959906001, 11/09/2004 21:06:15 MST Questions or comments about this message: please call the Document Policy Group at 303-397-2295.

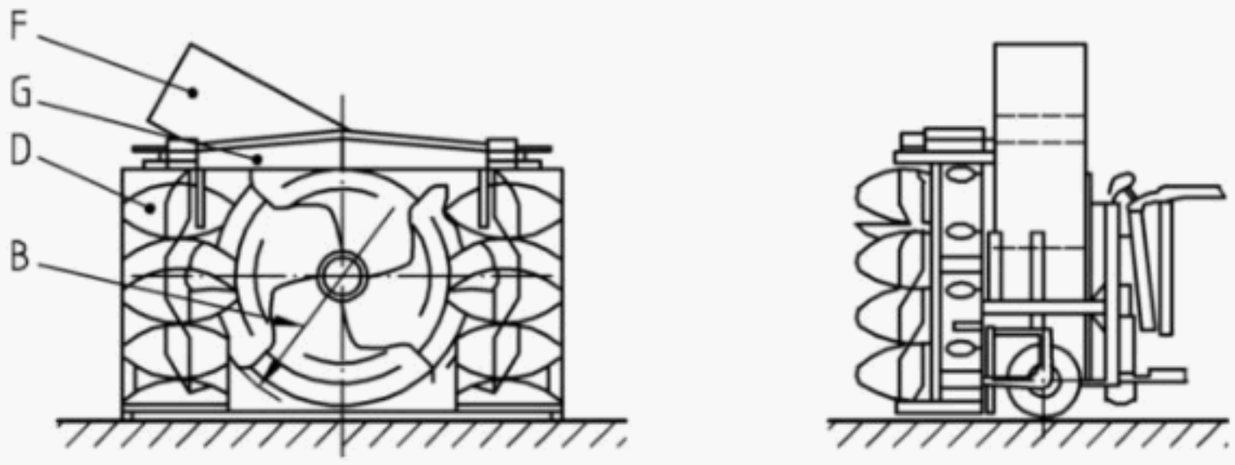

Figure A.6 — Snow clearing machine with rotary snow blower
(1 blower tool / 2 worm tools)

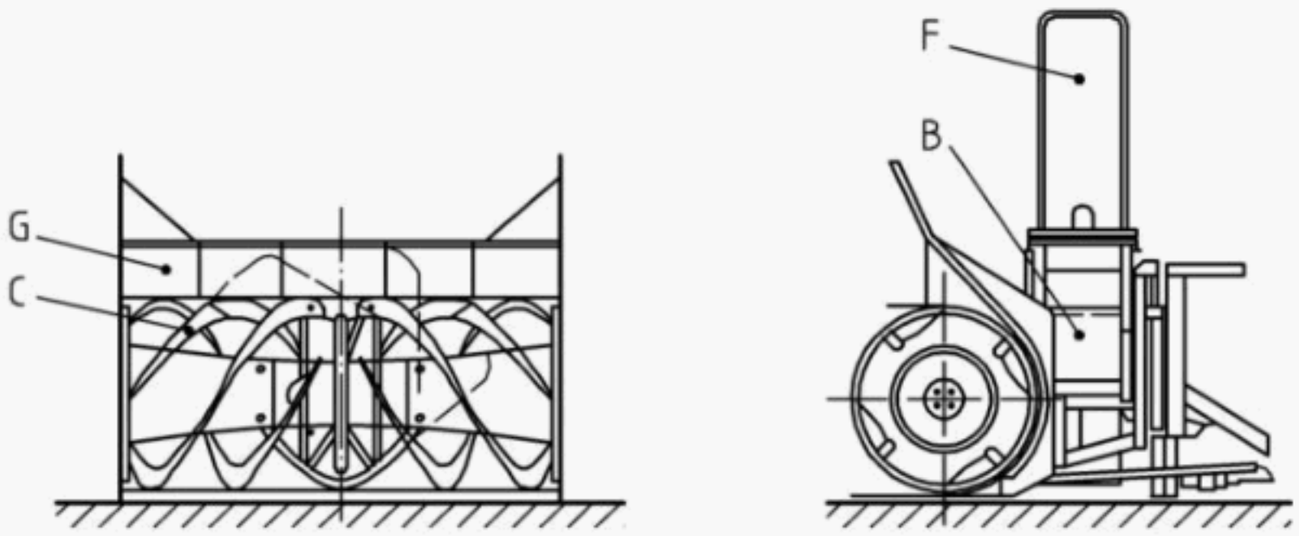

Figure A.7 — Snow clearing machine with plough/blower
(Rotary plough tool and blower tool)

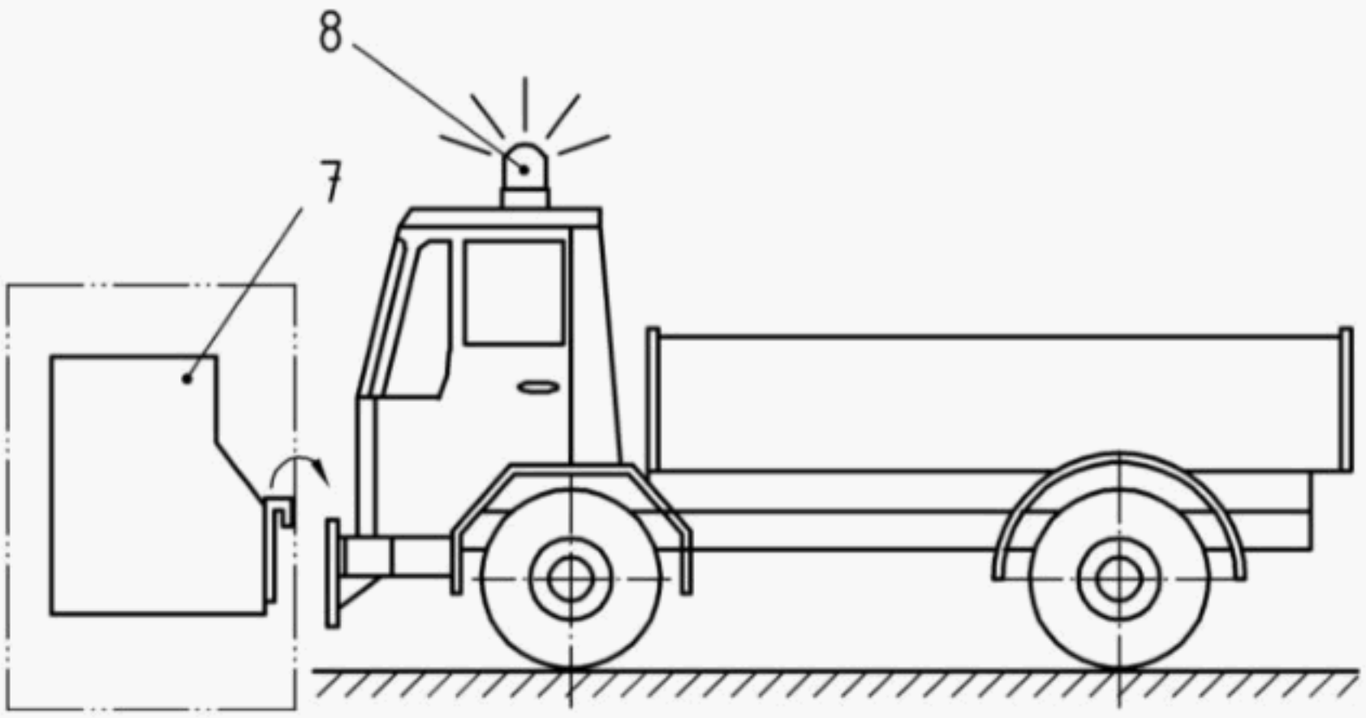

(7) Winter service machine
(8) Signal lamp (warning light)

Figure A.8 — Attachment's position on the vehicle

Copyright British Standards Institution
Reproduced by IHS under license with BSI - Uncontrolled Copy

Document provided by IHS Licensee=Bureau Veritas/5959906001, 11/09/2004 21:06:15 MST Questions or comments about this message: please call the Document Policy Group at 303-397-2295.

A

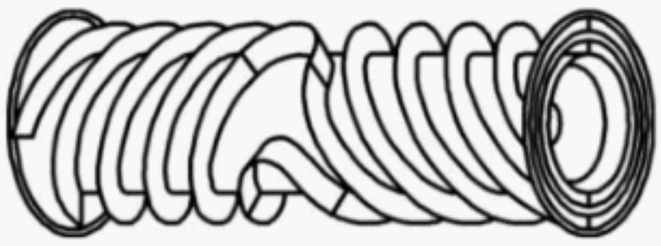

Figure A.9

B

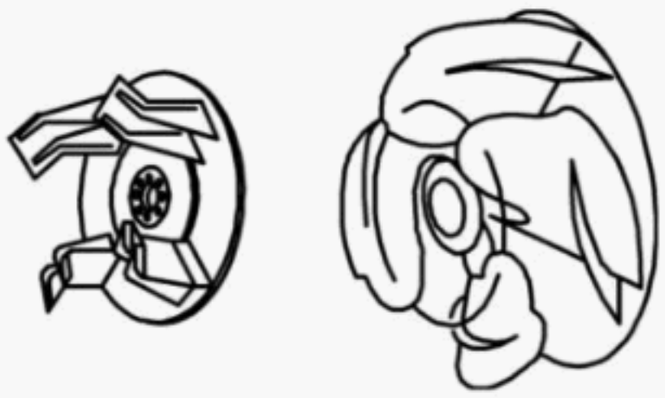

Figure A.10

C

Figure A.11

D

Figure A.12

E

Figure A.13

G

Figure A.14

G

Figure A.15

Copyright British Standards Institution
Reproduced by IHS under license with BSI - Uncontrolled Copy

Document provided by IHS Licensee=Bureau Veritas/5959906001, 11/09/2004 21:06:15 MST Questions or comments about this message: please call the Document Policy Group at 303-397-2295.

Annex B
(informative)

Truck attachment plate

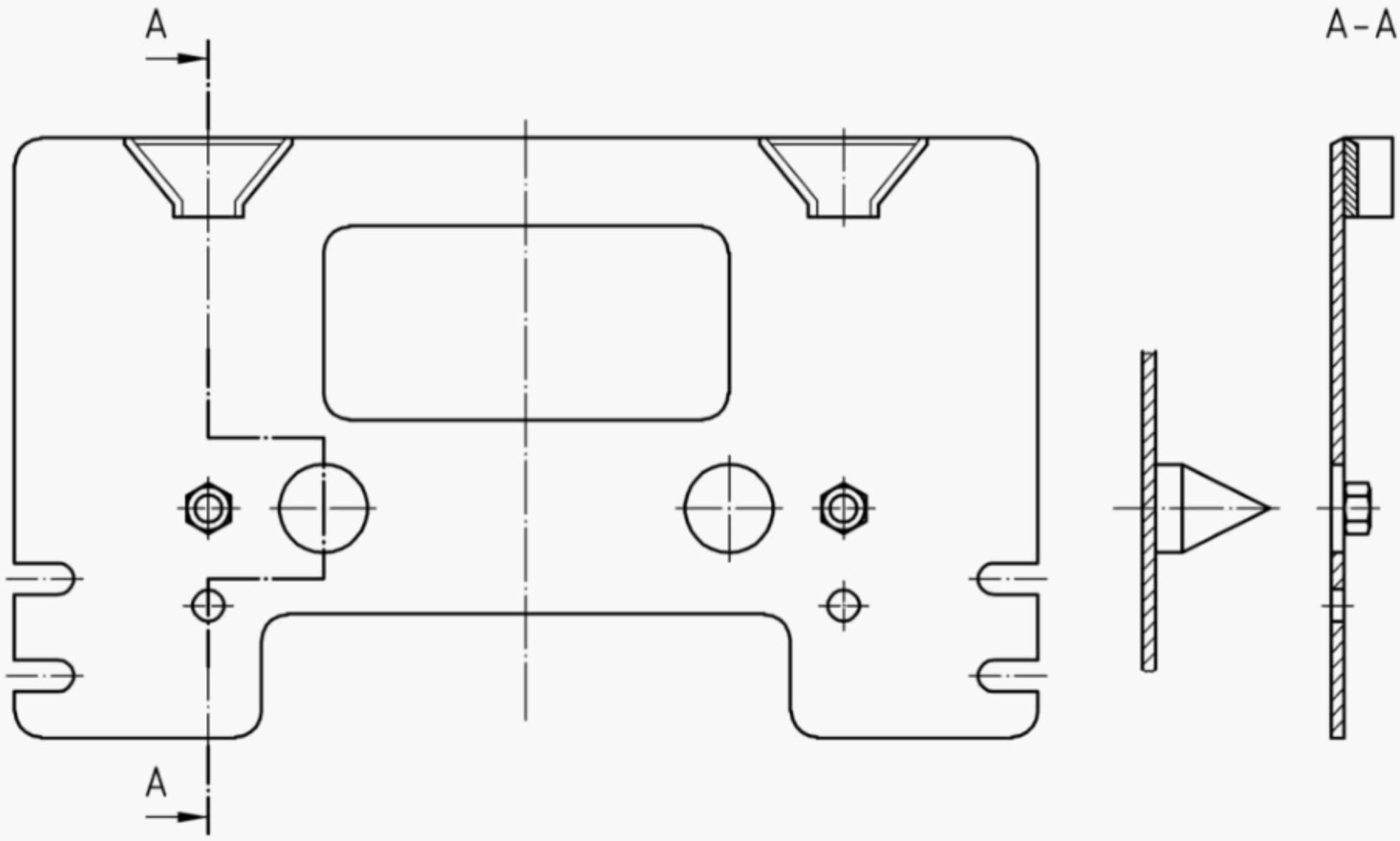

Figure B.1 — Truck attachment plate – Example for a possible design

Copyright British Standards Institution
Reproduced by IHS under license with BSI - Uncontrolled Copy

Document provided by IHS Licensee=Bureau Veritas/5959906001, 11/09/2004 21:06:15 MST Questions or comments about this message: please call the Document Policy Group at 303-397-2295.

Annex C
(normative)

Safety guards on winter service machines

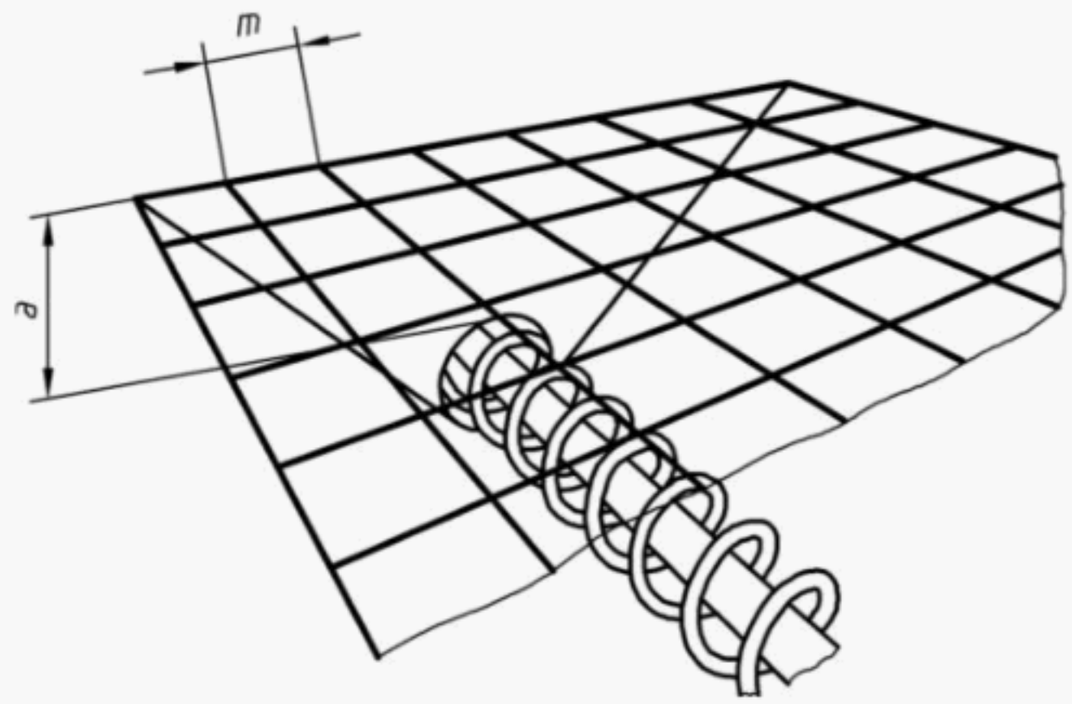

a (mm)	≥ 120	≥ 200	≥ 850
m (mm)	≤ 25	≤ 40	≤ 250

Figure C.1 — Spreaders – Auger Conveyors

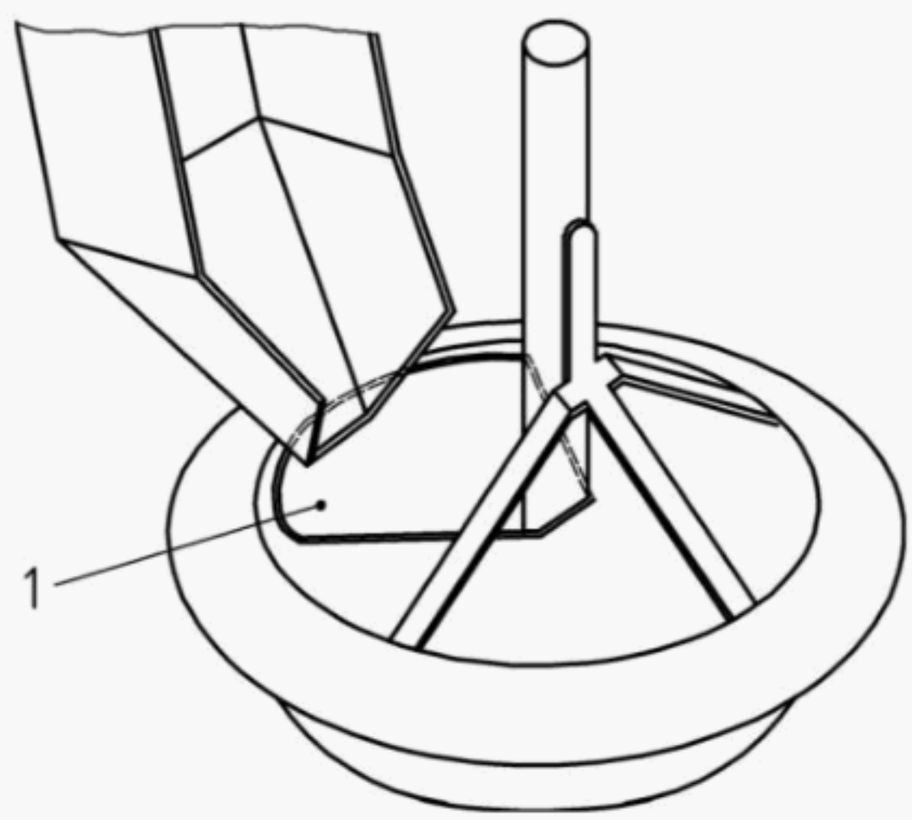

Key

1 Area for adjusting the input location

Figure C.2 — Spreaders – Spreading device

Copyright British Standards Institution
Reproduced by IHS under license with BSI - Uncontrolled Copy

Document provided by IHS Licensee=Bureau Veritas/5959906001, 11/09/2004 21:06:15 MST Questions or comments about this message: please call the Document Policy Group at 303-397-2295.

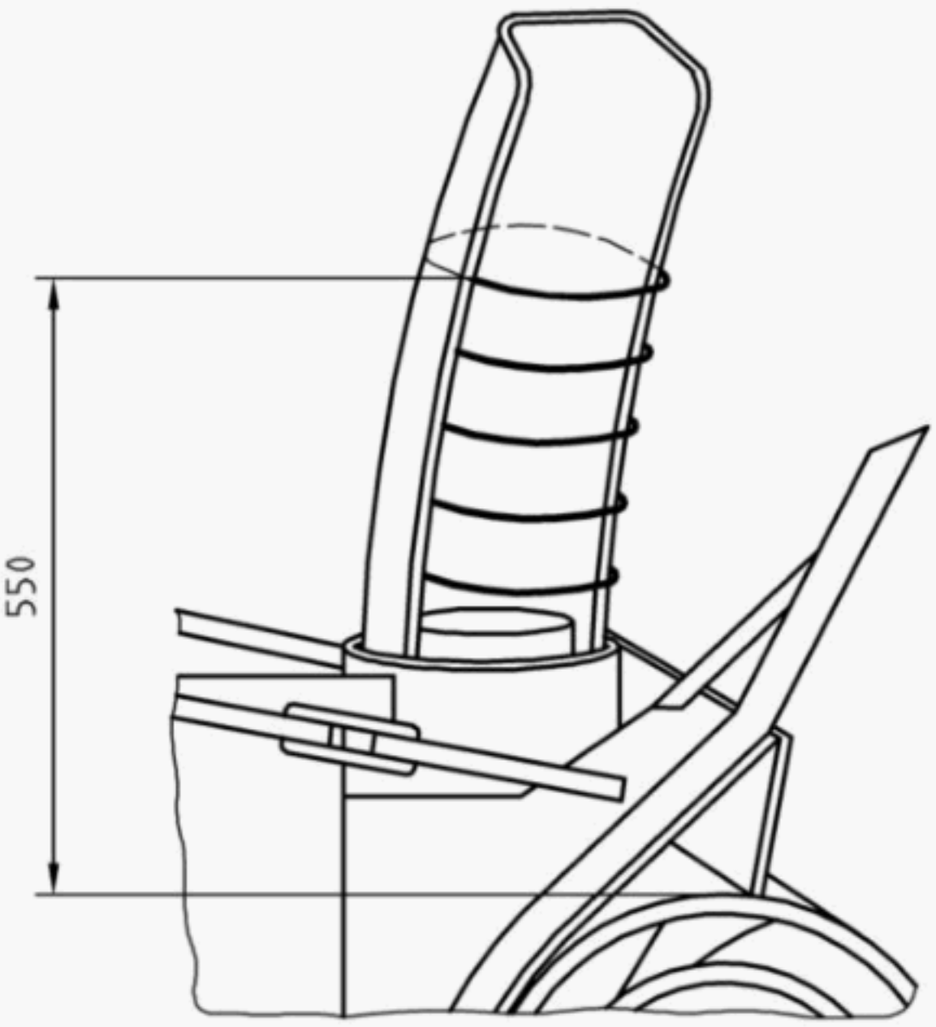

Figure C.3 — Snow Cutters and Blowers – Safety guard on the ejector of a big top fitted equipment (dimensions in mm)

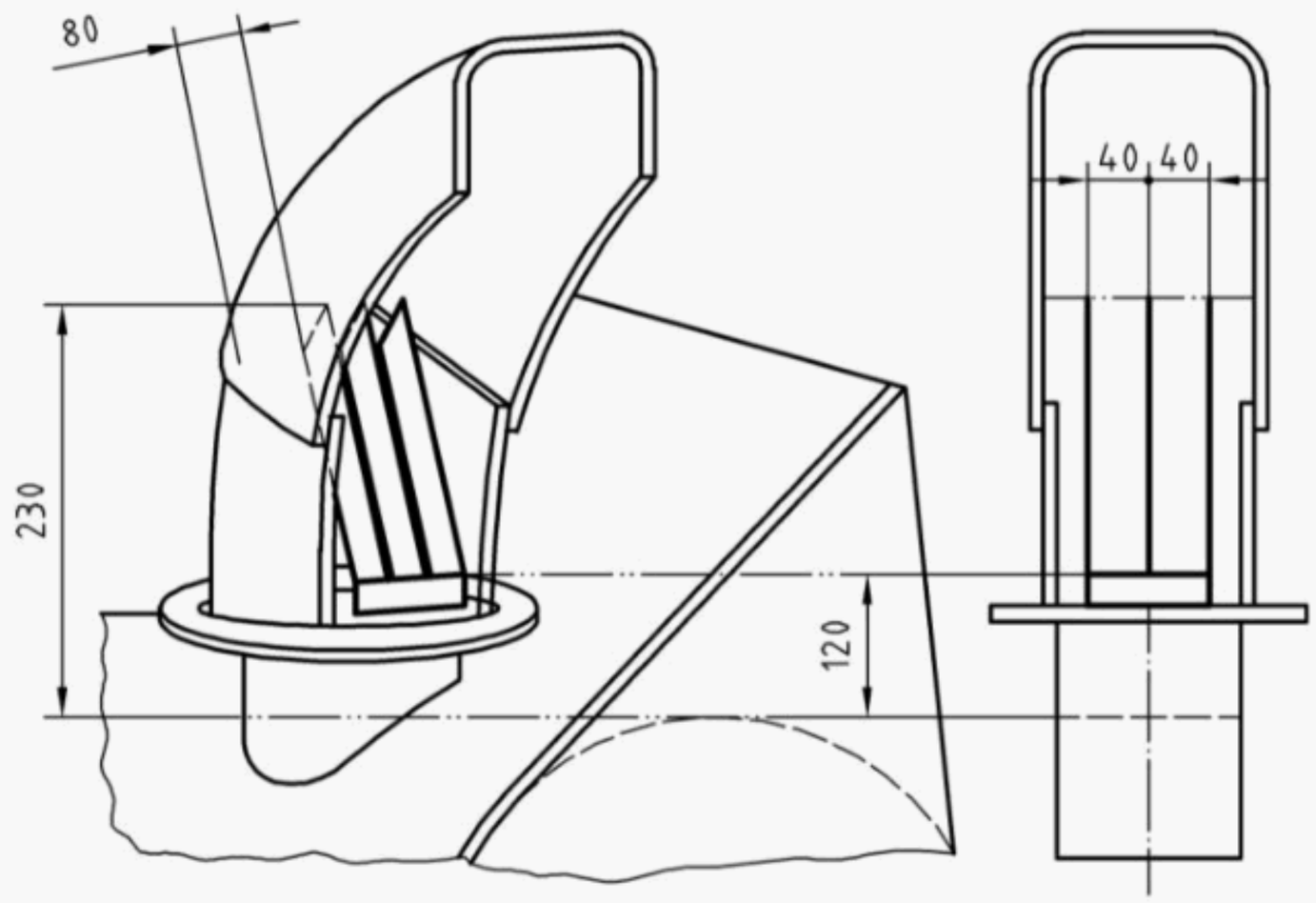

Figure C.4 — Snow Cutters and Blowers – Safety guard on the ejector of a top fitted equipment e.g. for a small tractor (dimensions in mm)

Copyright British Standards Institution
Reproduced by IHS under license with BSI - Uncontrolled Copy

Document provided by IHS Licensee=Bureau Veritas/5959906001, 11/09/2004 21:06:15 MST Questions or comments about this message: please call the Document Policy Group at 303-397-2295.

Annex D
(normative)

Warning sign "Warning of danger ahead"

Figure D.1 — "Clear blockage only when plough/blower is stopped and only use wood peg/shovel"

Copyright British Standards Institution
Reproduced by IHS under license with BSI - Uncontrolled Copy

Document provided by IHS Licensee=Bureau Veritas/5959906001, 11/09/2004 21:06:15 MST Questions or comments about this message: please call the Document Policy Group at 303-397-2295.

Annex ZA
(informative)

Relationship of this document with EU Directives

This document has been prepared under a mandate given to CEN by the European Commission and the European Free Trade Association and supports essential requirements of following EC Directive(s):

Machinery Directive 98/37/EC, amended by Directive 98/79/EC.

Compliance with this document provides one means of conforming with the specific essential requirements of the Directives concerned and associated EFTA regulations.

WARNING — Other requirements and other EU Directives may be applicable to the products falling within the scope of this document.

Copyright British Standards Institution
Reproduced by IHS under license with BSI - Uncontrolled Copy

Document provided by IHS Licensee=Bureau Veritas/5959906001, 11/09/2004 21:06:15 MST Questions or comments about this message: please call the Document Policy Group at 303-397-2295.

Bibliography

EN 349, Safety of machinery — Minimum gaps to avoid crushing of parts of the human body.

EN 418, Safety of machinery — Emergency stop equipment, functional aspects — Principles for design.

prEN 13524, Highway maintenance machines — Safety requirements.

EN ISO 3740, Acoustics — Determination of sound power levels of noise sources — Guidelines for the use of basic standards (ISO 3740:2000).

EN ISO 11200, Acoustics — Noise emitted by machinery and equipment — Guidelines for the use of basic standards for the determination of emission sound pressure levels at a workstation and at other specified positions (ISO 11200:1995).

EN ISO 11688-1, Acoustics — Recommended practice for the design of low-noise machinery and equipment — Part 1: Planning (ISO/TR 11688-1:1995).

ISO 730-1, Agricultural wheeled tractors — Rear-mounted three-point linkage — Part 1: Categories 1, 2, 3 and 4.

ISO 8759-1, Agricultural wheeled tractors — Front-mounted equipment — Part 1: Power take-off and three-point linkage.

ISO 8759-2, Agricultural wheeled tractors — Front-mounted equipment — Part 2: Stationary equipment connection.

ISO 11001-1, Agricultural wheeled tractors and implements — Three-point hitch couplers — Part 1: U-frame coupler.

ISO 11001-2, Agricultural wheeled tractors and implements — Three-point hitch couplers — Part 2: A-frame coupler.

ISO 11001-3, Agricultural wheeled tractors and implements — Three-point hitch couplers — Part 3: Link coupler.

ISO 11001-4, Agricultural wheeled tractors and implements — Three-point hitch couplers — Part 4: Bar coupler.

Copyright British Standards Institution
Reproduced by IHS under license with BSI - Uncontrolled Copy

Document provided by IHS Licensee=Bureau Veritas/5959906001, 11/09/2004 21:06:15 MST Questions or comments about this message: please call the Document Policy Group at 303-397-2295.

Copyright British Standards Institution
Reproduced by IHS under license with BSI - Uncontrolled Copy

Document provided by IHS Licensee=Bureau Veritas/5959906001, 11/09/2004
blank
21:06:15 MST Questions or comments about this message: please call the Document Policy Group at 303-397-2295.

BSI — British Standards Institution

BSI is the independent national body responsible for preparing British Standards. It presents the UK view on standards in Europe and at the international level. It is incorporated by Royal Charter.

Revisions

British Standards are updated by amendment or revision. Users of British Standards should make sure that they possess the latest amendments or editions.

It is the constant aim of BSI to improve the quality of our products and services. We would be grateful if anyone finding an inaccuracy or ambiguity while using this British Standard would inform the Secretary of the technical committee responsible, the identity of which can be found on the inside front cover. Tel: +44 (0)20 8996 9000. Fax: +44 (0)20 8996 7400.

BSI offers members an individual updating service called PLUS which ensures that subscribers automatically receive the latest editions of standards.

Buying standards

Orders for all BSI, international and foreign standards publications should be addressed to Customer Services. Tel: +44 (0)20 8996 9001.
Fax: +44 (0)20 8996 7001. Email: orders@bsi-global.com. Standards are also available from the BSI website at ~~http://www.bsi-global.com~~.

In response to orders for international standards, it is BSI policy to supply the BSI implementation of those that have been published as British Standards, unless otherwise requested.

Information on standards

BSI provides a wide range of information on national, European and international standards through its Library and its Technical Help to Exporters Service. Various BSI electronic information services are also available which give details on all its products and services. Contact the Information Centre. Tel: +44 (0)20 8996 7111. Fax: +44 (0)20 8996 7048. Email: info@bsi-global.com.

Subscribing members of BSI are kept up to date with standards developments and receive substantial discounts on the purchase price of standards. For details of these and other benefits contact Membership Administration. Tel: +44 (0)20 8996 7002. Fax: +44 (0)20 8996 7001.
Email: membership@bsi-global.com.

Information regarding online access to British Standards via British Standards Online can be found at ~~http://www.bsi-global.com/bsonline~~.

Further information about BSI is available on the BSI website at ~~http://www.bsi-global.com~~.

Copyright

Copyright subsists in all BSI publications. BSI also holds the copyright, in the UK, of the publications of the international standardization bodies. Except as permitted under the Copyright, Designs and Patents Act 1988 no extract may be reproduced, stored in a retrieval system or transmitted in any form or by any means – electronic, photocopying, recording or otherwise – without prior written permission from BSI.

This does not preclude the free use, in the course of implementing the standard, of necessary details such as symbols, and size, type or grade designations. If these details are to be used for any other purpose than implementation then the prior written permission of BSI must be obtained.

Details and advice can be obtained from the Copyright & Licensing Manager. Tel: +44 (0)20 8996 7070. Fax: +44 (0)20 8996 7553.
Email: copyright@bsi-global.com.

BSI
389 Chiswick High Road
London
W4 4AL

Copyright British Standards Institution
Reproduced by IHS under license with BSI - Uncontrolled Copy

Document provided by IHS Licensee=Bureau Veritas/5959906001, 11/09/2004 21:06:15 MST Questions or comments about this message: please call the Document Policy Group at 303-397-2295.